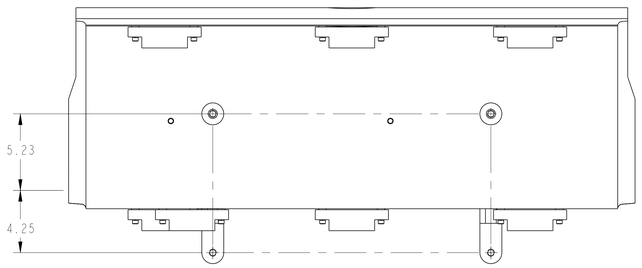

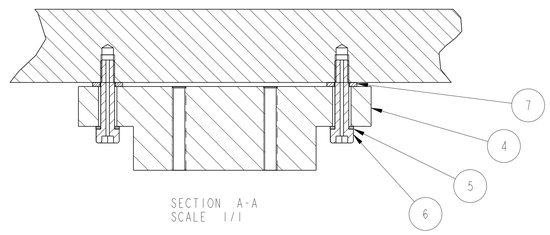

SECTION A-A
SCALE 1/1

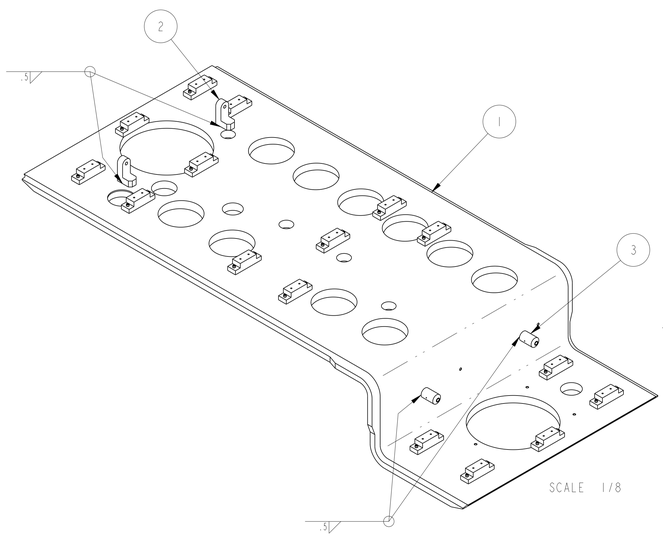

SCALE 1/8

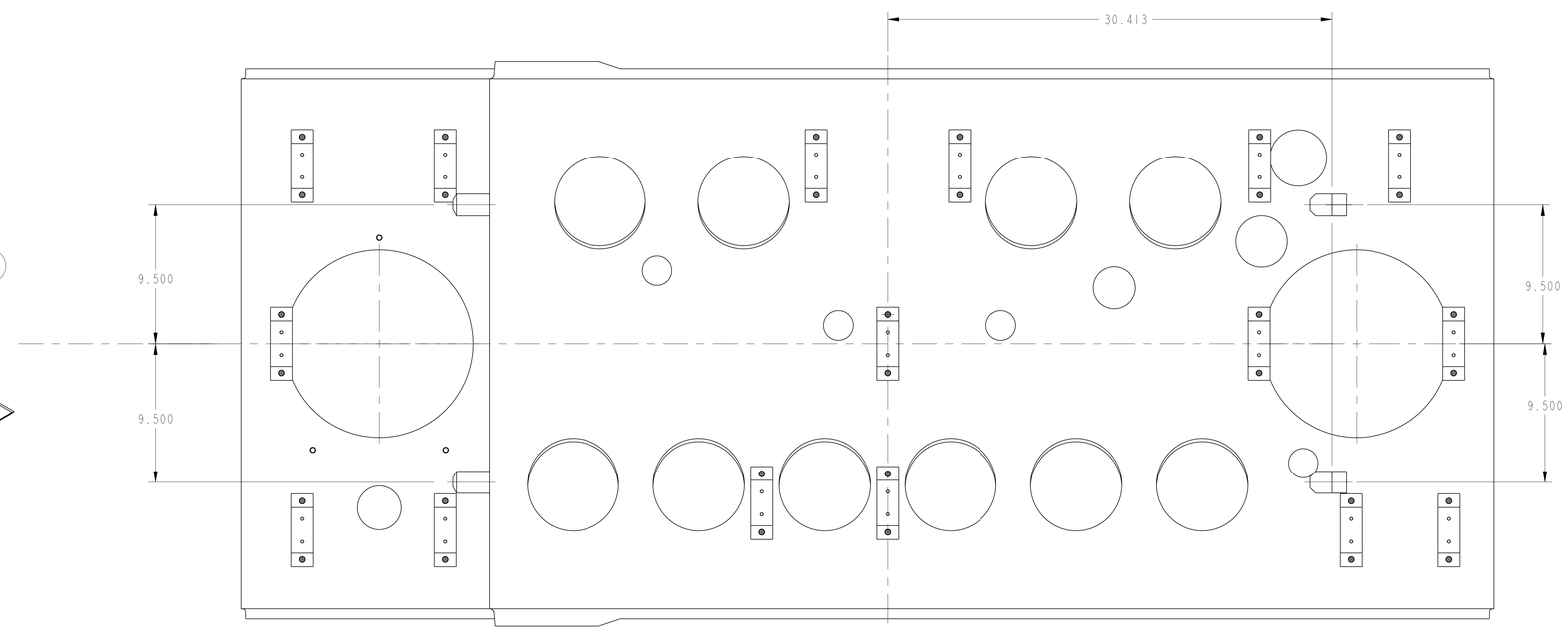

NOTES: UNLESS OTHERWISE SPECIFIED,

1. DIMENSIONS AND TOLERANCING PER ANSI Y14.5M-1982 UNITS ARE IN INCHES UNLESS OTHERWISE SPECIFIED.
2. USE OF SULFUR OR SILICONE BEARING OILS, LUBRICANTS, OR COOLANTS ARE STRICTLY PROHIBITED
3. USE OF RESIN OR RUBBER BONDED ADRASIVES UNDER POWER IS STRICTLY PROHIBITED. USE VITREOUS BONDED ABRASIVES ONLY.
4. VENDOR WELD PROCEDURE SUBJECT TO LBNL APPROVAL.
7. ESTIMATED WEIGHT = 1,130 LBS

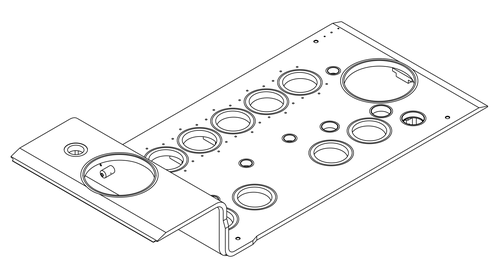

SCALE 3/32

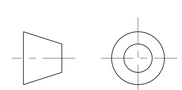

THIRD ANGLE PROJECTION

ITEM	PART NO	REQD	DESCRIPTION	MATERIAL
7	-	32	WASHER, M6	SS 18-8
6	-	32	SCH, M6X1, 30 LG, VENTED, SILVER PLATED	SS 18-8
5	-	32	LOCK WASHER, M6	SS
4	251081	16	SPACER	NEMA G10
3	25M861	2	STRUT BOSS	304L SS
2	25M854	2	STRUT BRACKET	304L SS
1	251134	1	TOP PLATE DFBX C & G, IP 2 & 8 LEFT	304L SS

REV	DWG	CHK	ZONE	DATE	CHANGES
C	RLM	JPZ		9/9/03	PLATE DETAIL UPDATE
B	JDR	DPO		11/7/02	GRAPHICS UPDATES
A	JDR	DPO		09/17/02	INITIAL RELEASE

UNLESS OTHERWISE SPECIFIED
TOLERANCES: X.X ± 0.1 FRAC. ± 1/64; X.XX ± 0.03 Angles ± 1.00°; X.XXX ± 0.010 FINISH 125/ 1/64
DO NOT SCALE PRINT
THREADS ARE CLASS 2
CHAMFER ENDS OF ALL SCREW TREADS 30°
CUT ROUND, 1.5 THREAD RELIEF ON MACHINED THREADS
BREAK EDGES .016 MAX. ON MACHINED WORK
REMOVE BURRS, WELD SPLATTER & LOOSE SCALE
IN ACCORDANCE WITH ASME Y14.5M & B46.1

SHOP ORDERS
ACCT NO. | NO. REQD | DATE ISSD | DEL TO | DATE REQD
SURFACE TREATMT: -
IDENT METHOD: TAG
PROJECT NUMBER: N/A
PROJECT NAME: N/A
DWG BY: KNOLLS DATE: 24-Aug-01
CHK BY: JON ZBASNIK DATE: 04-APR-02
APR BY: JON ZBASNIK DATE: 04-APR-02

ERNEST ORLANDO LAWRENCE BERKELEY NATIONAL LABORATORY
UNIVERSITY OF CALIFORNIA - BERKELEY

LHC IR FEEDBOX
VACUUM
TOP PLATE WELDMENT IP2,8 - LEFT

MICROFILMED: | DWG. TYPE: ASSEM | SHOWN ON: 251137 | SCALE: 1/4 | DO NOT SCALE PRINTS
PATENT CLEAR: | DESIGN ACCT. NO.: Z5LCE2 | CATEGORY CODE: LH2002 | DWG. NO.: 251736 | SIZE: C | REV.: C
SHEET 1 OF 1

DWG. NO. 251736 SIZE C REV. 1 SH. 1