ITEM	PART NO	REQD	DESCRIPTION	MATERIAL
3	-		16014-02-W CERAMASEAL 32 PIN	-
2	251367		CRYOGENIC INSTRUMENTATION TUBE	SS 304L
1	251368		CRYOGENIC INSTRUMENTAION, 37 PIN HOLDER	SS 304L

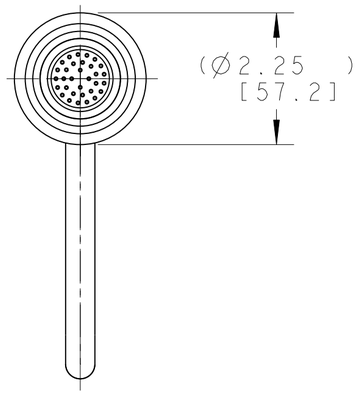

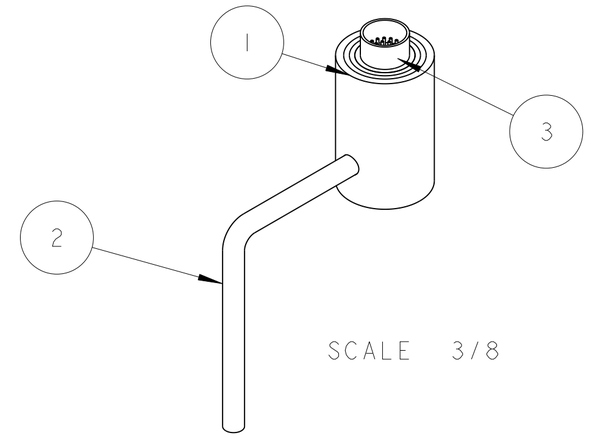

SCALE 3/8

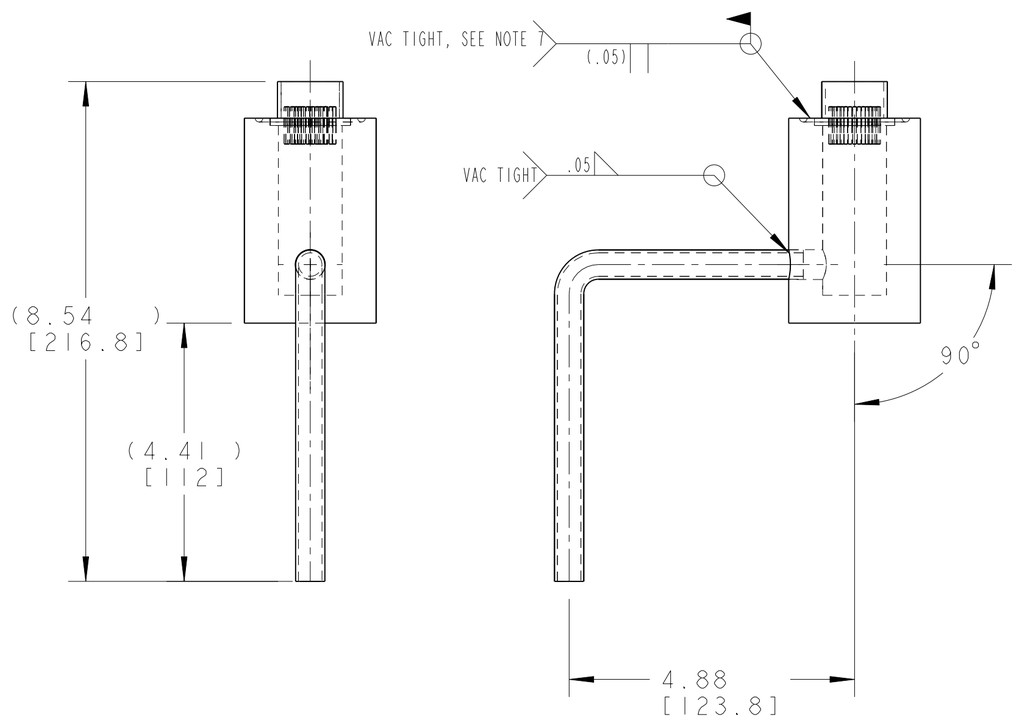

NOTES: (UNLESS OTHERWISE SPECIFIED)

1. THIS IS A CRYOGENIC VACUUM COMPONENT.
2. WELDING PROCEDURE: PER VENDOR SPECIFICATION WITH LBNL APPROVAL.
3. CLEANING PROCEDURE : PER VENDOR SPECIFICATION WITH LBNL APPROVAL.
4. PACKAGING AND STORAGE PROCEDURE OF THE COMPONENTS: PER VENDOR SPECIFICATION WITH LBNL APPROVAL.
5. DIMENSIONS AND TOLERANCING PER ANSI Y14.5M-1982. UNITS ARE IN INCHES [mm] UNLESS OTHERWISE SPECIFIED.
6. USE OF SULFUR OR SILICONE BEARING OILS, LUBRICANTS, OR COOLANTS ARE STRICTLY PROHIBITED.
7. USE OF RESIN OR RUBBER BONDED ABRASIVES UNDER POWER IS STRICTLY PROHIBITED. USE VITREOUS BONDED ABRASIVES ONLY.
8. VENDOR SUGGESTED CHANGES TO WELD PREPS; SUBJECT TO LBNL APPROVAL.
9. MADE AT FINAL ASSEMBLY AFTER CONNECTING WIRES.

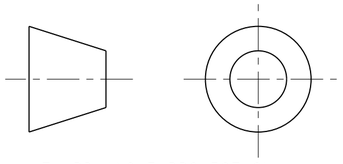

THIRD ANGLE PROJECTION

REV	DWG	CHK	ZONE	DATE	CHANGES
A	ARH	DPO		09-14-02	INITIAL RELEASE

UNLESS OTHERWISE SPECIFIED

TOLERANCES		
	X.X ± 0.1	FRAC. ± 1/64
	X.XX ± 0.03	Angles ± 1.00°
	X.XXX ± 0.010	FINISH 125 (μin)

DO NOT SCALE PRINT

THREADS ARE CLASS 2
CHAMFER ENDS OF ALL SCREW TREADS 30°
CUT ROUND, 1.5 THREAD RELIEF ON MACHINED THREADS
BREAK EDGES .016 MAX. ON MACHINED WORK
REMOVE BURRS, WELD SPLATTER & LOOSE SCALE
IN ACCORDANCE WITH ASME Y14.5M & B46.1

SHOP ORDERS

ACCT NO.	NO. REQD	SER NO.	-
DEL TO		DATE ISSD	-
SURFACE TREATMT	-	DATE REQD	-
IDENT METHOD	TAG		
PROJECT NUMBER	N/A		
PROJECT NAME	N/A		
DWG BY	KNOLLS	DATE	21-Sep-01
CHK BY	Jon Zbasnik	DATE	04-Feb-02
APR BY	Jon Zbasnik	DATE	04-Feb-02

N/A (logo)

ERNEST ORLANDO LAWRENCE BERKELEY NATIONAL LABORATORY
UNIVERSITY OF CALIFORNIA - BERKELEY

LHC IR FEEDBOX
ELECTRICAL
CRYOGENIC DIAGNOSTIC ASSEMBLY

MICROFILMED:	DWG. TYPE	SHOWN ON	SCALE: 1/2	DO NOT SCALE PRINTS
	ASSEM	251177	SHEET 1 OF 1	
PATENT CLEAR:	DESIGN ACCT. NO.	CATEGORY CODE	DWG. NO. SIZE	REV.
	Z5LCE2	LH2004	2511703	A

DWG. NO. 2511703 SIZE A REV. SH. 1

Dwg. File: 251170 Model File: 251170.MIKE