DWG. NO.	SIZE	REV.	SH.
2511674		B	1

ITEM	PART NO	REQD	DESCRIPTION	MATERIAL
3	251169		QRL CHIMNEY FLANGE	304L SS
2	251323		ENCLOSURE CHIMNEY HALF 2, JC2	304L SS
1	251324		ENCLOSURE CHIMNEY HALF 1, JC2	304L SS

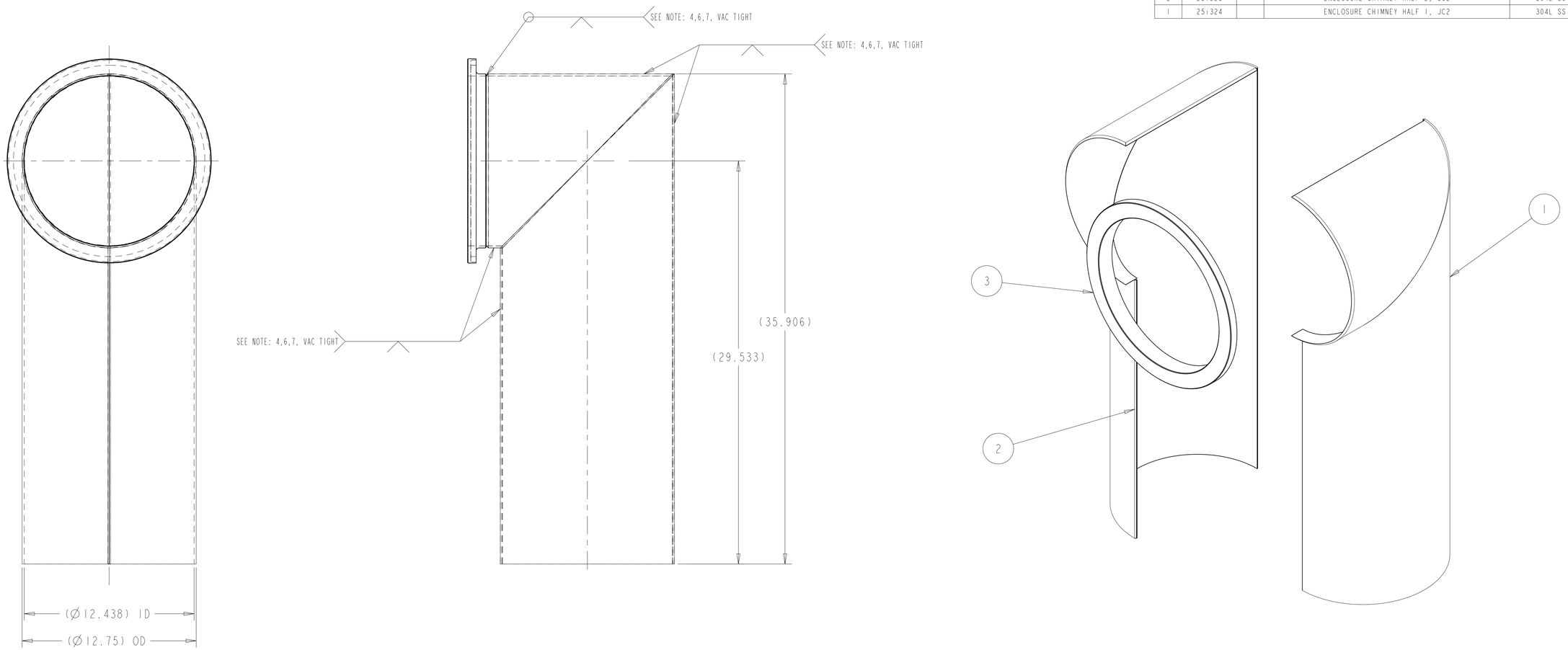

NOTES: UNLESS OTHERWISE SPECIFIED,

1. DIMENSIONS AND TOLERANCING PER ANSI Y14.5M-1982 UNITS ARE IN INCHES UNLESS OTHERWISE SPECIFIED.
2. USE OF SULFUR OR SILICONE BEARING OILS, LUBRICANTS, OR COOLANTS ARE STRICTLY PROHIBITED
3. USE OF RESIN OR RUBBER BONDED ADRASIVES UNDER POWER IS STRICTLY PROHIBITED. USE VITREOUS BONDED ABRASIVES ONLY.
4. CLEAN AFTER MACHINING PER VENDOR SPECIFICATION; SUBJECT TO LBNL APPROVAL.
5. VENDOR SUGGESTED CHANGES TO WELD PREPS; SUBJECT TO LBNL APPROVAL.
6. PERFORM ALL WELDS AT THE TOP ASSEMBLY.
7. ALL VACUUM WELDS TO BE CONTINUOUS FUSION WELDS UTILIZING THE TIG PROCESS AND DONE IN A CLEAN FACILITY. NO FILLER ROD ALLOWED.
8. PROTECT FINISHED PART BY BAGGING OR SIMILAR METHOD TO PROTECT AND MAINTAIN CLEANLINESS DURING SHIPMENT AND STORAGE.
9. VENDOR SUGGESTED CHANGES TO TOLERANCES TO FACILITATE ASSEMBLY; SUBJECT TO LBNL APPROVAL
10. ESTIMATED WEIGHT = 55 LBS

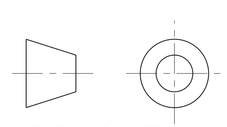

THIRD ANGLE PROJECTION

REV	DWG	CHK	ZONE	DATE	CHANGES
B	JDR	DPO		10-28-02	CHANGED MATERIAL CALLOUT ITEM 2
A	RLM	DPO		10-4-02	INITIAL RELEASE

UNLESS OTHERWISE SPECIFIED

TOLERANCES		
	X.X ± 0.1	FRAC. ± 1/64
	X.XX ± 0.01	Angles ± 1.00°
	X.XXX ± 0.005	FINISH 125 (μin)

DO NOT SCALE PRINT

THREADS ARE CLASS 2
CHAMFER ENDS OF ALL SCREW TREADS 30°
CUT ROUND, 1.5 THREAD RELIEF ON MACHINED THREADS
BREAK EDGES .016 MAX. ON MACHINED WORK
REMOVE BURRS, WELD SPLATTER & LOOSE SCALE
IN ACCORDANCE WITH ASME Y14.5M & B46.1

SHOP ORDERS

ACCT NO.	NO. REQD	SER NO.	-
DEL TO		DATE ISSD	-
SURFACE TREATMT	-	DATE REQD	-
IDENT METHOD	TAG		
PROJECT NUMBER	N/A		
PROJECT NAME	N/A		
DWG BY	R LA MANTIA	DATE	28-Nov-01
CHK BY	Jon Zbasnik	DATE	21-Apr-02
APR BY	Jon Zbasnik	DATE	21-Apr-02

ERNEST ORLANDO LAWRENCE
BERKELEY NATIONAL LABORATORY
UNIVERSITY OF CALIFORNIA - BERKELEY

LHC IR FEEDBOX
VACUUM
ENCLOSURE JUMPER, JC2

MICROFILMED:	DWG. TYPE	SHOWN ON	SCALE: 0.250	DO NOT SCALE PRINTS
	ASSEM	VARIOUS	SHEET 1 OF 1	
PATENT CLEAR:	DESIGN ACCT. NO.	CATEGORY CODE	DWG. NO.	SIZE / REV.
	Z5LCE2	LH2002	2511674	B