DWG. NO.	SIZE	REV.	SH.
2511624	A	1	

ITEM	PART NO	REQD	DESCRIPTION	MATERIAL
7	251887	1	SMART STICK DIAGNOSTIC ASSEMBLY	-
6	-	24	HEX NUT M6	SS
5	-	1	RELIEF VALVE, CIRCLE SEAL #D580-T1-8M-10%-28.8PSIG	-
4		24	SOC. HD. CP SCRW, M6 X 30mm LG.	SS
3		1	2 3/4" FOUR WAY CROSS	SS
2		1	2 3/4" CF FLANGE, MDC#110006	SS
1		1	2 3/4" CF FLANGE WITH 1"-11 1/2" NPT THREAD	SS

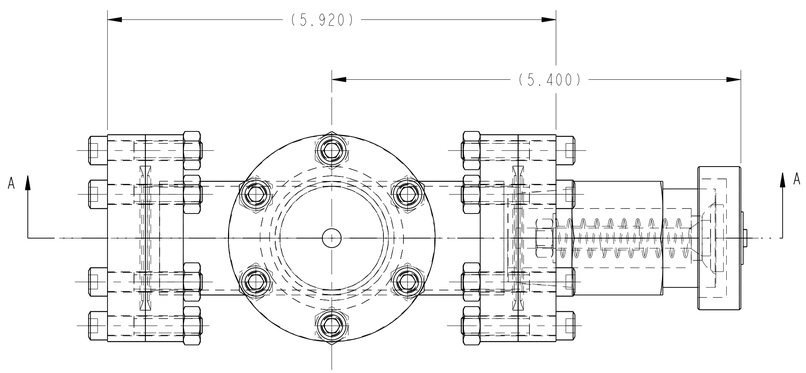

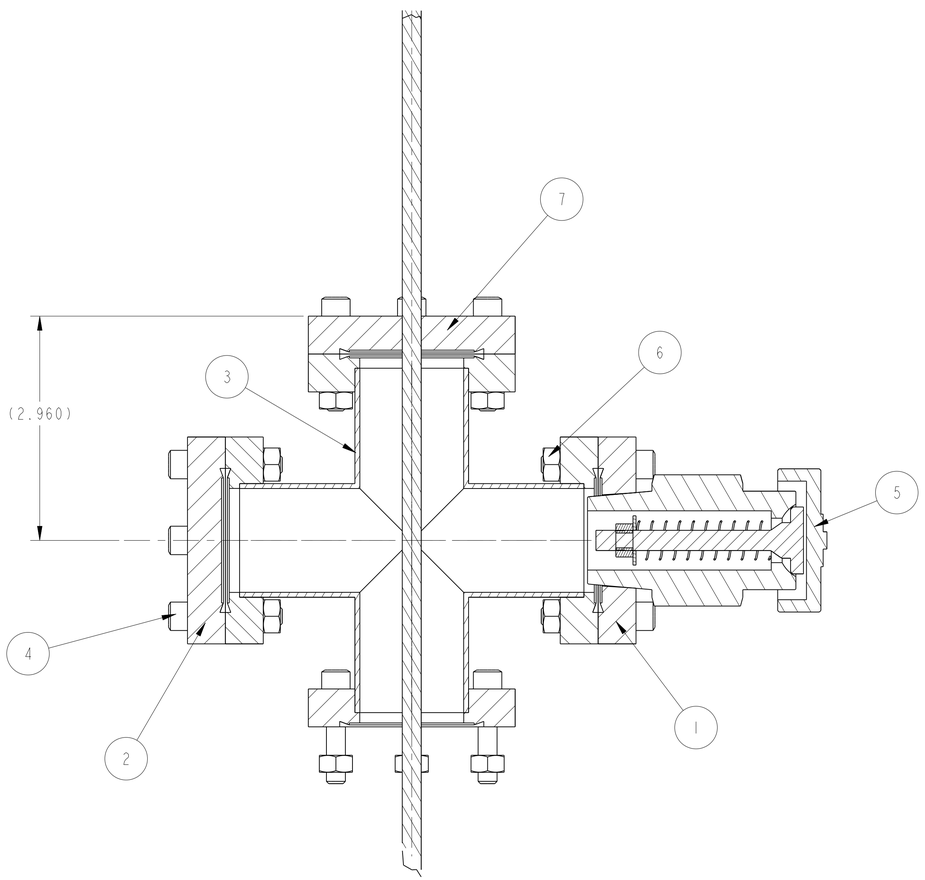

SECTION A-A

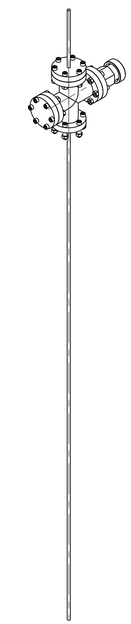

SCALE 0.167

NOTES: (UNLESS OTHERWISE SPECIFIED)

1. THIS IS A CRYOGENIC VACUUM COMPONENT.
2. WELDING PROCEDURE: PER VENDOR SPECIFICATION WITH LBNL APPROVAL.
3. CLEANING PROCEDURE : PER VENDOR SPECIFICATION WITH LBNL APPROVAL.
4. PACKAGING AND STORAGE PROCEDURE OF THE COMPONENTS: PER VENDOR SPCIFICATION WITH LBNL APPROVAL.
5. DIMENSIONS AND TOLERANCING PER ANSI Y14.5M-1982. UNITS ARE IN INCHES [mm] UNLESS OTHERWISE SPECIFIED.
6. USE OF SULFUR OR SILICONE BEARING OILS, LUBRICANTS, OR COOLANTS ARE STRICTLY PROHIBITED.
7. USE OF RESIN OR RUBBER BONDED ABRASIVES UNDER POWER IS STRICTLY PROHIBITED. USE VITREOUS BONDED ABRASIVES ONLY.
8. VENDOR SUGGESTED CHANGES TO WELD PREPS; SUBECT TO LBNL APPROVAL.
9. VENDOR SUGGESTED CHANGES TO TOLERANCES TO FACILITATE FABRICATION OR ASSEMBLY; SUBECT TO LBNL APPROVAL.
10. PROTECT FINISHED PART BY BAGGING OR SIMILAR METHOD TO PROTECT AND MAINTAIN CLEANLINESS DURING SHIPMENT AND STORAGE.

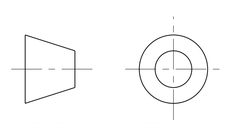

THIRD ANGLE PROJECTION

REV	DWG	CHK	ZONE	DATE	CHANGES
A	MJK	DPO		9/11/02	INITIAL RELEASE

UNLESS OTHERWISE SPECIFIED

TOLERANCES		
X.X ± 0.1	FRAC. ± 1/64	
X.XX ± 0.03	Angles ± 1.00°	
X.XXX ± 0.010	FINISH 125 √(μin)	

DO NOT SCALE PRINT

THREADS ARE CLASS 2
CHAMFER ENDS OF ALL SCREW TREADS 30°
CUT ROUND, 1.5 THREAD RELIEF ON MACHINED THREADS
BREAK EDGES .016 MAX. ON MACHINED WORK
REMOVE BURRS, WELD SPLATTER & LOOSE SCALE
IN ACCORDANCE WITH ASME Y14.5M & B46.1

SHOP ORDERS

SER NO.	-		
ACCT NO.		NO. REQD	DATE ISSD -
DEL TO			DATE REQD -
SURFACE TREATMT	-		
IDENT METHOD	TAG		
PROJECT NUMBER	N/A		
PROJECT NAME	N/A		
DWG BY	M. KNOLLS		DATE 3/15/02
CHK BY	Jon Zbasnik		DATE 3/16/02
APR BY	Jon Zbasnik		DATE 3/16/02

ERNEST ORLANDO LAWRENCE BERKELEY NATIONAL LABORATORY
UNIVERSITY OF CALIFORNIA - BERKELEY

LHC IR FEEDBOX
MAJOR ASSEMBLY
LHE DIAGNOSTIC ASSY

MICROFILMED:	DWG. TYPE	SHOWN ON	SCALE: 1.000	DO NOT SCALE PRINTS
	ASSEM		SHEET 1 OF 1	
PATENT CLEAR:	DESIGN ACCT. NO.	CATEGORY CODE	DWG. NO.	SIZE / REV.
	Z5LCE2	LH2001	2511624	A