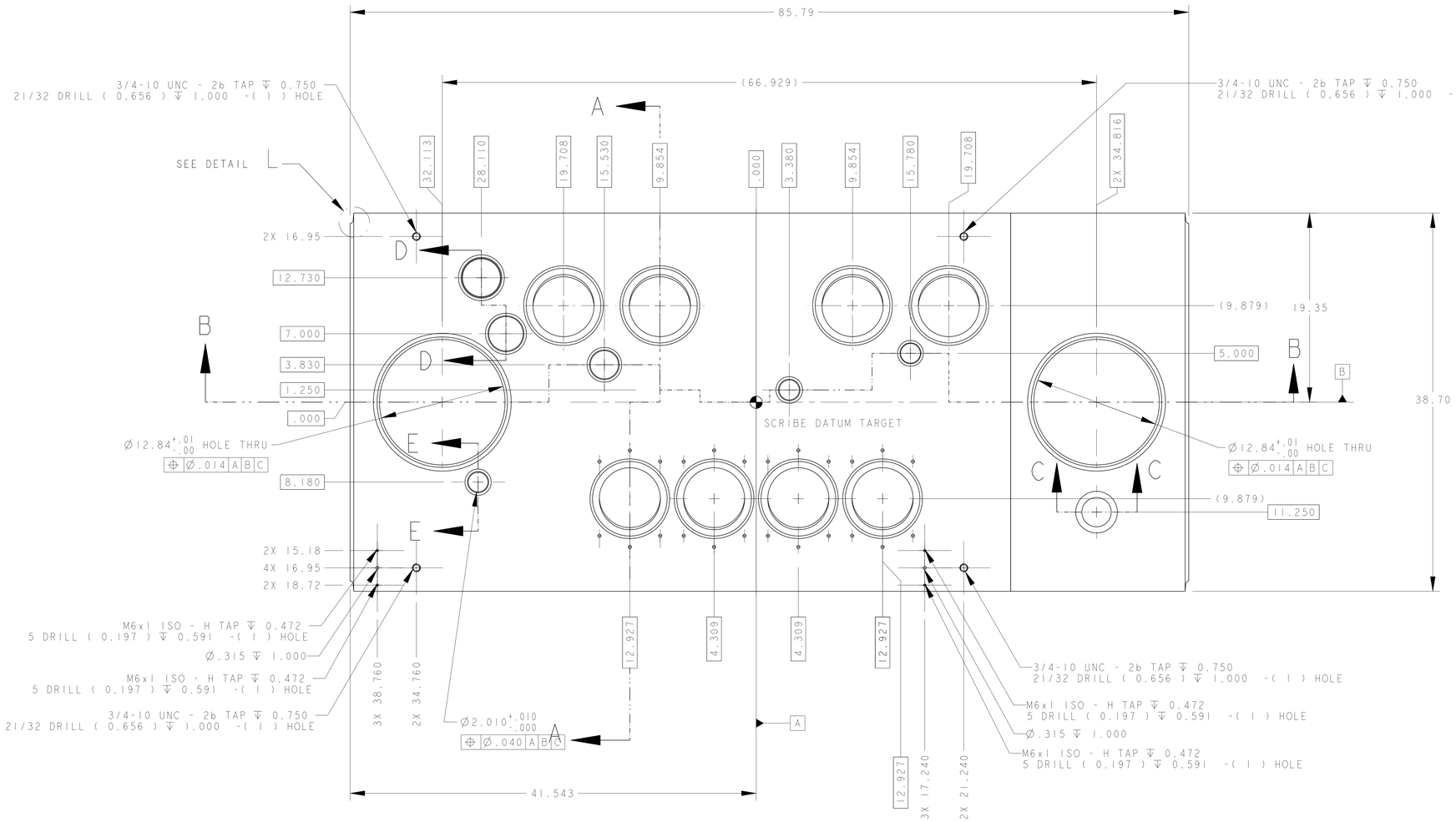


NOTES: UNLESS OTHERWISE SPECIFIED,

1. BLANCHARD GRIND PLATE, DATUM -C- SIDE BEFORE MACHINING MINIMUM CLEANUP.
2. DIMENSIONS AND TOLERANCING PER ANSI Y14.5M-1982 UNITS ARE IN INCHES UNLESS OTHERWISE SPECIFIED.
3. USE OF SULFUR OR SILICONE BEARING OILS, LUBRICANTS, OR COOLANTS ARE STRICTLY PROHIBITED
4. USE OF RESIN OR RUBBER BONDED ADRASIVES UNDER POWER IS STRICTLY PROHIBITED. USE VITREOUS BONDED ABRASIVES ONLY.
5. CLEANING SPECIFICATIONS FOR PARTS AND WELDMENTS TO BE PROVIDED BY VENDOR AND APPROVED BY LBNL.
6. PROTECT FINISHED PART BY BAGGING OR SIMILAR METHOD TO PROTECT AND MAINTAIN CLEANLINESS DURING SHIPMENT AND STORAGE.
7. VENDOR PROPOSED WELD PREPS MODIFICATIONS SUBJECT TO LBNL APPROVAL.
8. STRESS RELIEVE PART AFTER BENDING, PRIOR TO FINISH MACHINING.
9. ESTIMATED WEIGHT = 1,096 LBS

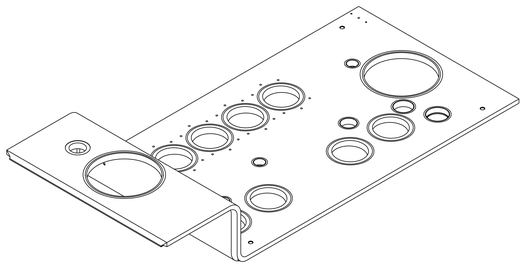

SCALE 1/10

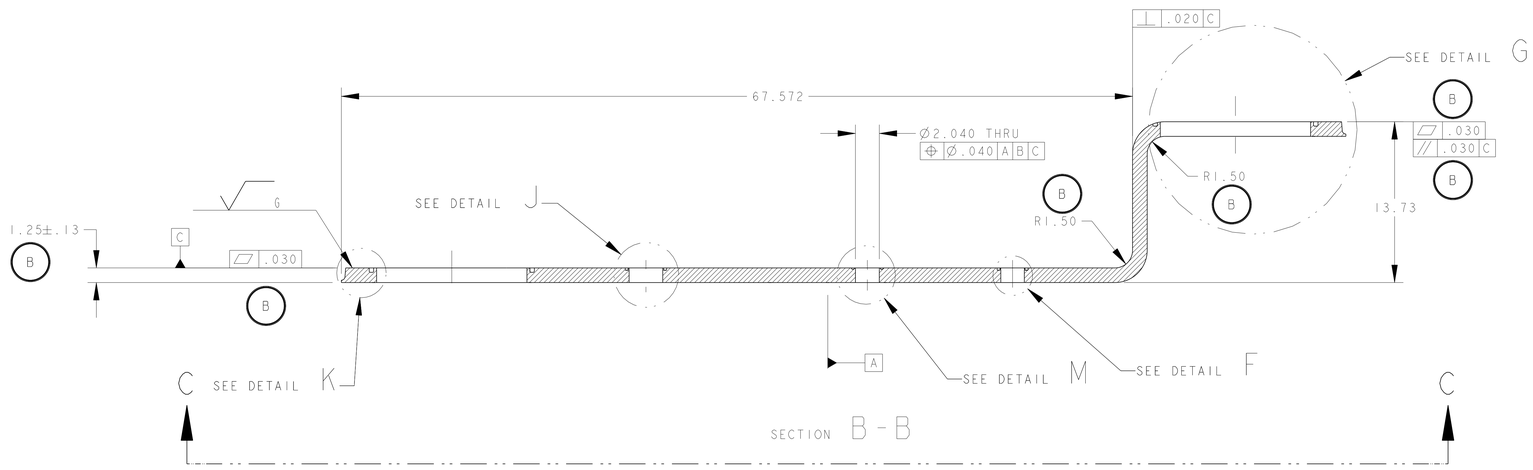


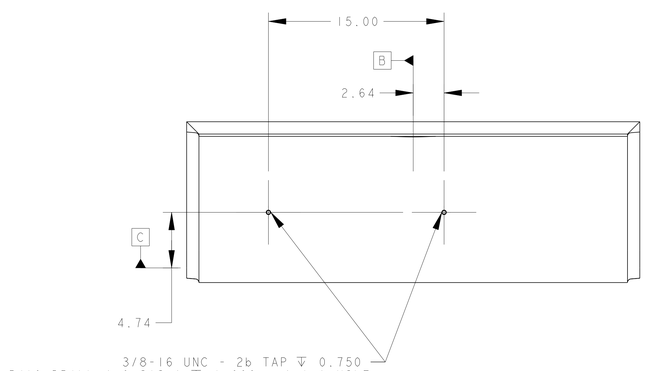


| REV | DWG | CHK | ZONE | DATE | CHANGES |
|---|---|---|---|---|---|
| B | JDR | DPO | | 02/19/03 | - INCREASED BEND RADIUS FROM 1.00,<br>- INCREASED THICKNESS TOL. FROM 1.25 +/- .03,<br>- ADDED TRUE POSITION TOL. TO HOLES (SHEET 2)<br>- INCREASED FLATNESS TOLERANCE FROM .010,<br>- INCREASED PARALLELISM FROM .020, |
| A | JDR | DPO | | 09/17/02 | INITIAL RELEASE |

THIRD ANGLE PROJECTION

UNLESS OTHERWISE SPECIFIED
TOLERANCES
X.X ± 0.1 | FRAC. ± 1/64
X.XX ± 0.03 | Angles ± 1.00°
X.XXX ± 0.010 | FINISH 125 √ (Ra)
DO NOT SCALE PRINT
THREADS ARE CLASS 2
CHAMFER ENDS OF ALL SCREW THREADS 30°
CUT ROUND, 1.5 THREAD RELIEF ON MACHINED THREADS
BREAK EDGES .016 MAX. ON MACHINED WORK
REMOVE BURRS, WELD SPLATTER & LOOSE SCALE
(IN ACCORDANCE WITH ASME Y14.5M & B46.1)

SHOP ORDERS

| | | | |
|---|---|---|---|
| ACCT NO. | NO. REQD | SER NO. | - |
| REL TO | | DATE ISSD | - |
| SURFACE TREATMT | - | DATE REQD | - |
| IDENT METHOD | TAG | | |
| PROJECT NUMBER | N/A | | |
| PROJECT NAME | N/A | | |
| DWG BY | KNOLLS | DATE | 22-Aug-01 |
| CHK BY | JON ZBASNIK | DATE | 04-APR-02 |
| APP BY | JON ZBASNIK | DATE | 04-APR-02 |

| DESCRIPTION | MATERIAL | MAT. LOCATION |
|---|---|---|
| PLATE,HOT ROLLED, ANNEALED, PICKLED PER ASTM A-240 | 304L SS | - |

ERNEST ORLANDO LAWRENCE
BERKELEY NATIONAL LABORATORY
UNIVERSITY OF CALIFORNIA - BERKELEY

LHC IR FEEDBOX
VACUUM
TOP PLATE DFBX A, IP1 LEFT

| MICROFILMED: | DWG. TYPE | SHOWN ON | SCALE: 1/5 | DO NOT SCALE PRINTS |
|---|---|---|---|---|
| | PART | 251146 | SHEET 1 OF 3 | |
| PATENT CLEAR: | DESIGN ACCT. NO. | CATEGORY CODE | DWG. NO. | SIZE / REV. |
| | Z5LCE2 | LH2002 | 2511456 | B |

DWG. NO. 2511456 B 1

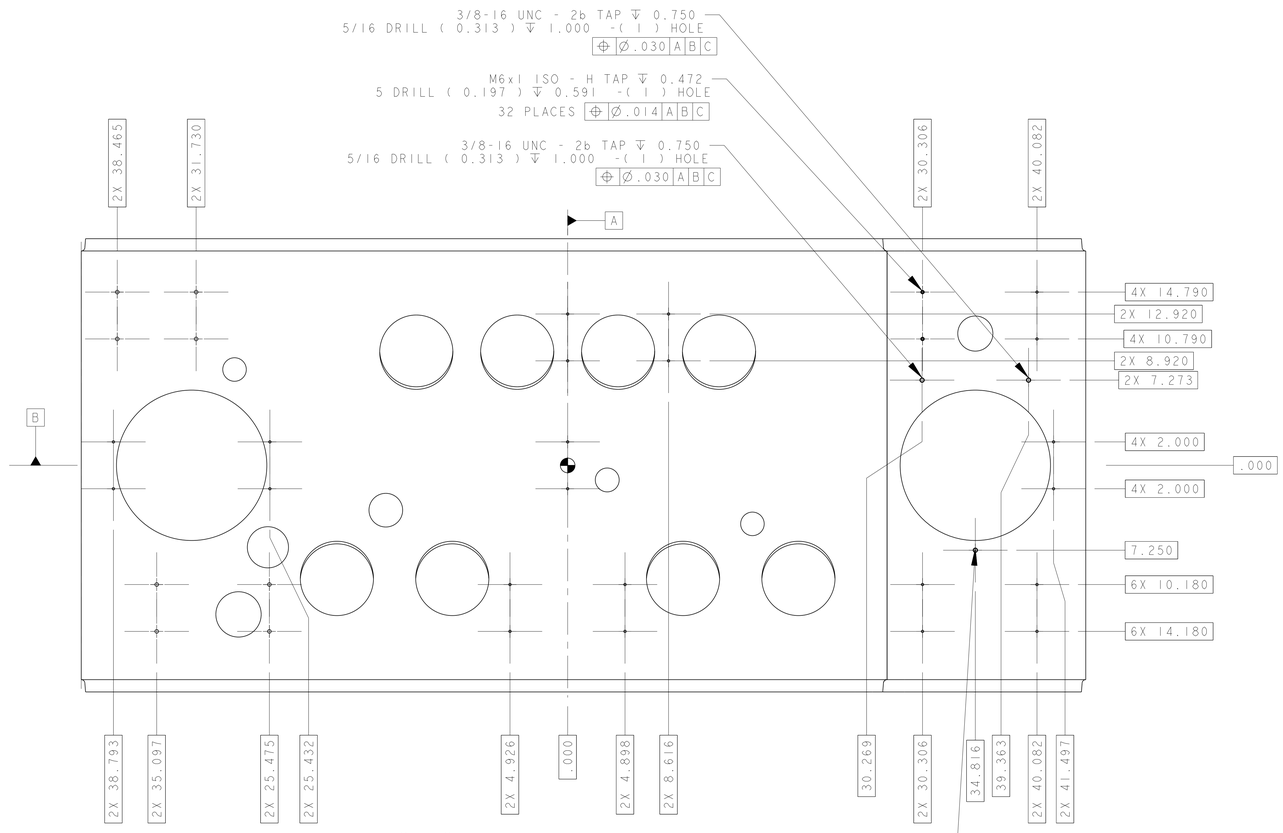


VIEW C - C

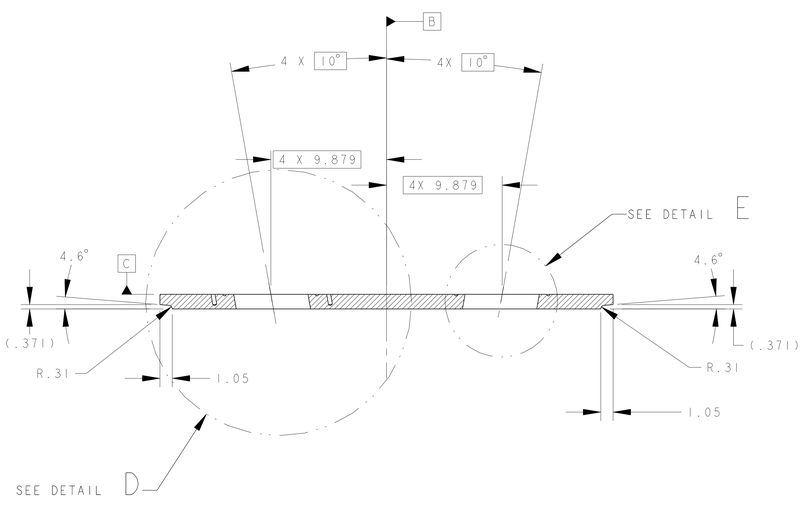


SECTION A - A
ROTATED 90° CW

DETAIL G
SCALE 3/4
2 PLACES

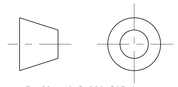

THIRD ANGLE PROJECTION

ERNEST ORLANDO LAWRENCE
BERKELEY NATIONAL LABORATORY
UNIVERSITY OF CALIFORNIA - BERKELEY

LHC IR FEEDBOX
VACUUM
TOP PLATE DFBX A, IP1 LEFT

| MICROFILMED: | DWG. TYPE | SHOWN ON | SCALE: 1/5 | DO NOT SCALE PRINTS |
|---|---|---|---|---|
| | PART | 251146 | SHEET 2 OF 3 | |
| PATENT CLEAR: | DESIGN ACCT. NO. | CATEGORY CODE | DWG. NO. | SIZE / REV. |
| | Z5LCE2 | LH2002 | 2511456 | B |

DWG. NO. 2511456 SIZE B REV. 2

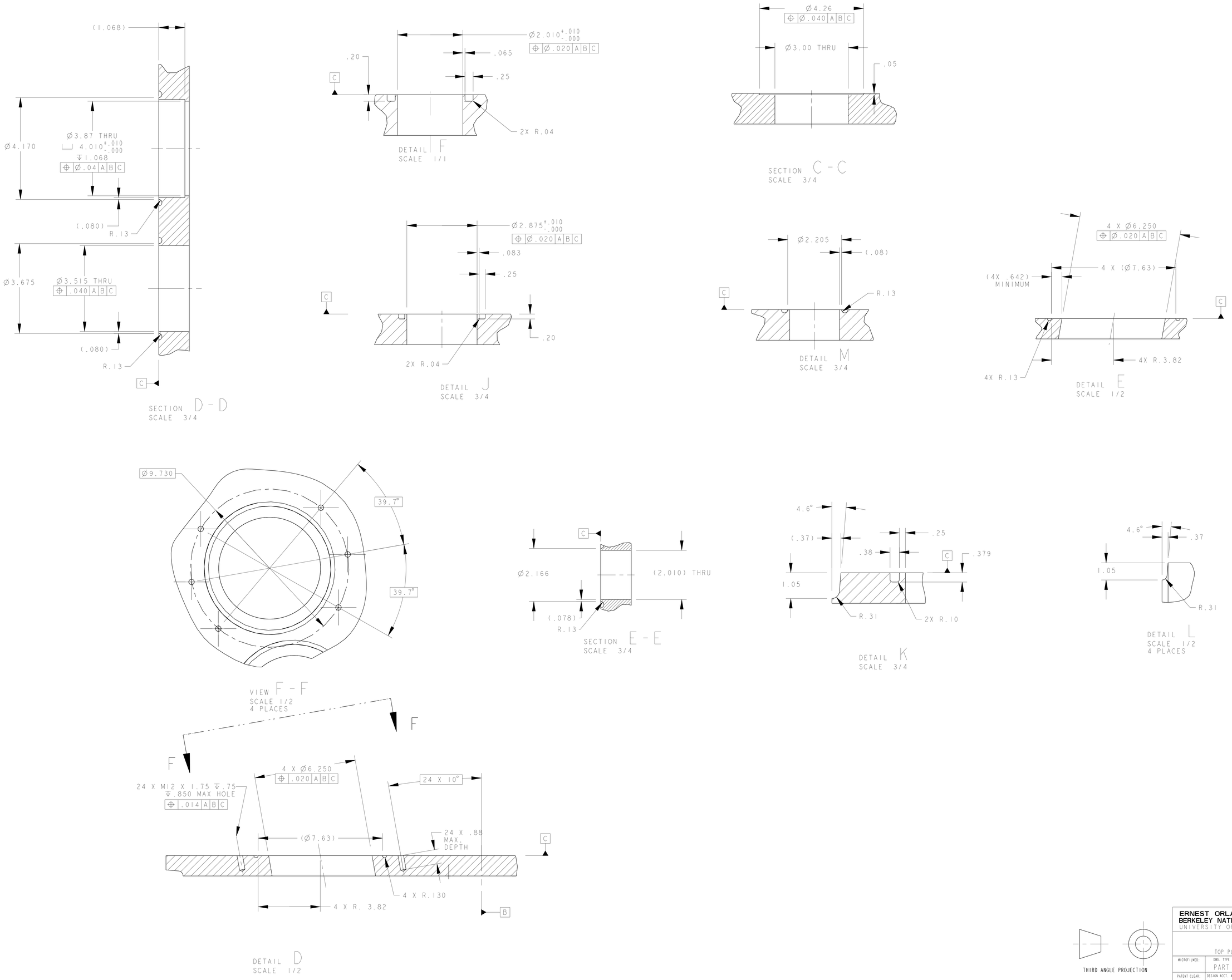


ERNEST ORLANDO LAWRENCE
BERKELEY NATIONAL LABORATORY
UNIVERSITY OF CALIFORNIA - BERKELEY

LHC IR FEEDBOX
VACUUM
TOP PLATE DFBX A, IPI LEFT

| MICROFILMED: | DWG. TYPE | SHOWN ON | SCALE: 1/5 | DO NOT SCALE PRINTS |
|---|---|---|---|---|
| | PART | 251146 | SHEET 3 OF 3 | |
| PATENT CLEAR: | DESIGN ACCT. NO. | CATEGORY CODE | DWG. NO. | SIZE / REV. |
| | Z5LCE2 | LH2002 | 2511456 | B |

DWG. NO. 2511456 SIZE B REV. 3