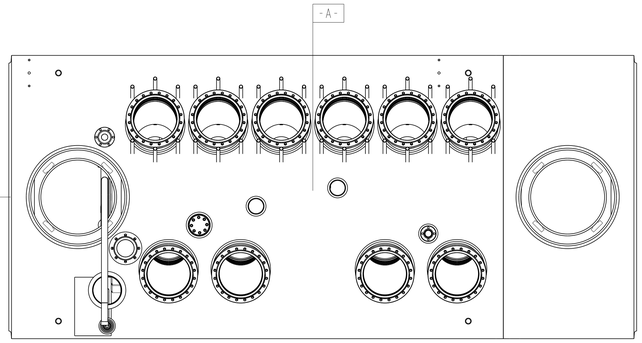

SCALE 1/8

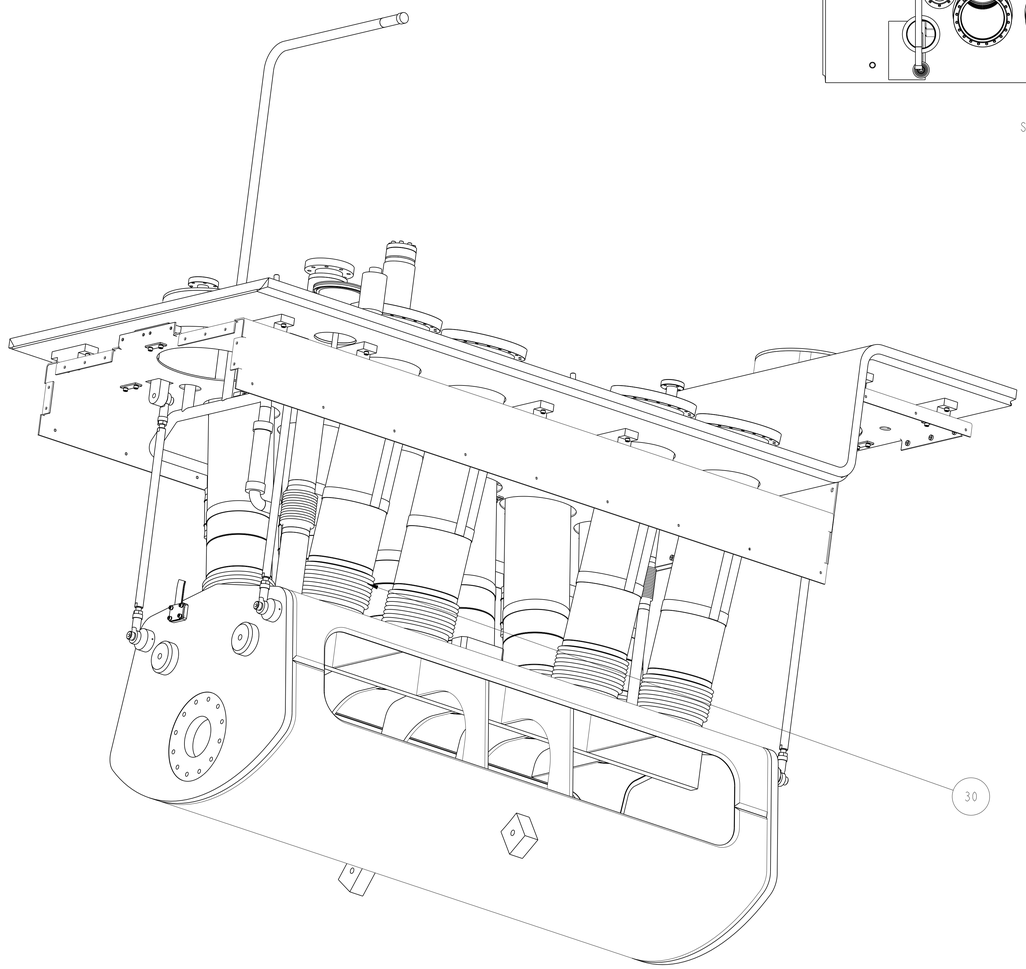

SCALE 3/16

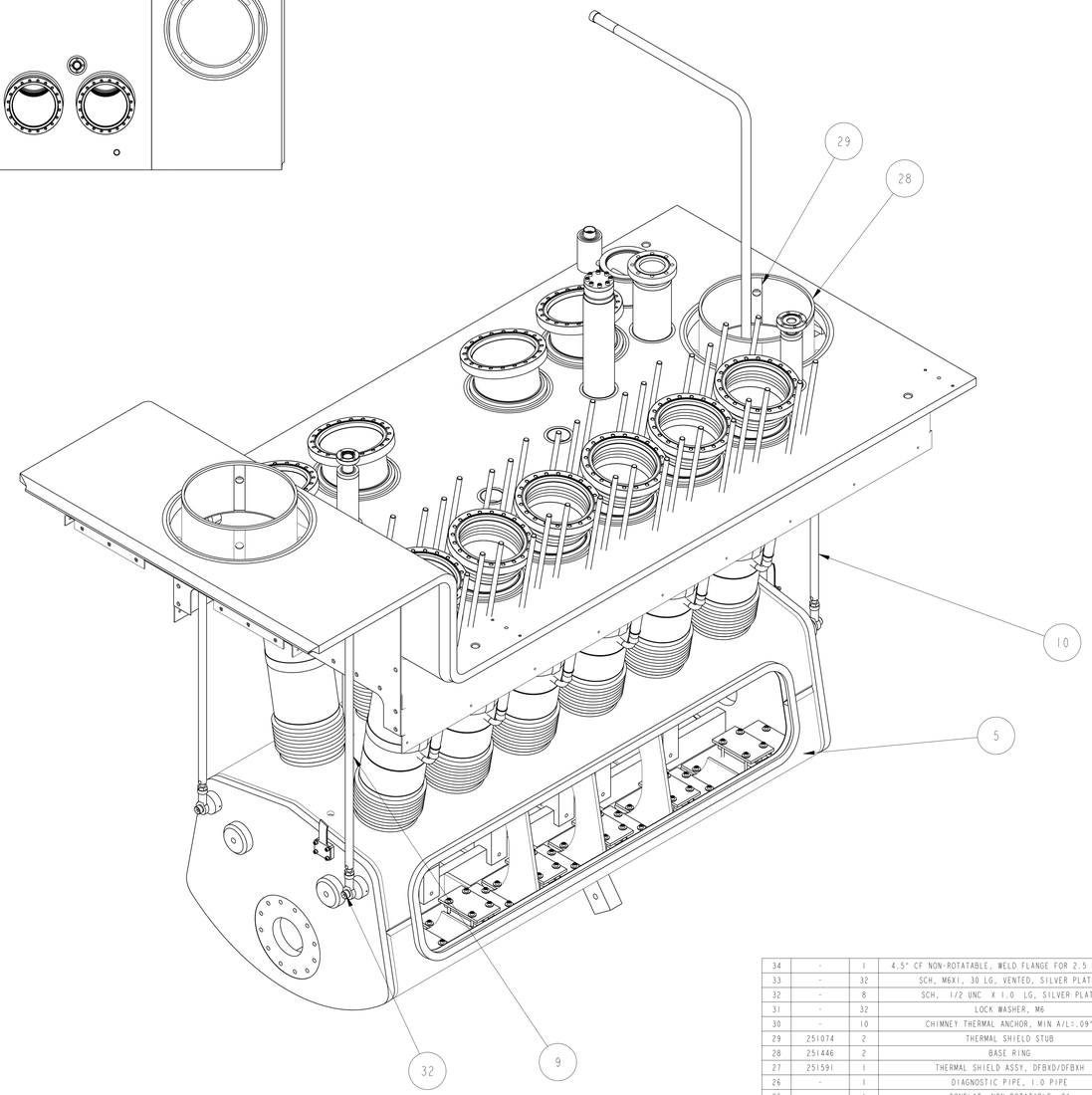

SCALE 3/16

NOTES: UNLESS OTHERWISE SPECIFIED,

1. DIMENSIONS AND TOLERANCING PER ANSI Y14.5M-1982 UNITS ARE IN INCHES UNLESS OTHERWISE SPECIFIED.
2. USE OF SULFUR OR SILICONE BEARING OILS, LUBRICANTS, OR COOLANTS ARE STRICTLY PROHIBITED
3. USE OF RESIN OR RUBBER BONDED ADRASIVES UNDER POWER IS STRICTLY PROHIBITED. USE VITREOUS BONDED ABRASIVES ONLY.
4. CLEAN AFTER MACHINING PER VENDOR SPECIFICATION; SUBJECT TO LBNL APPROVAL.
5. VENDOR SUGGESTED CHANGES TO WELD PREPS; SUBJECT TO LBNL APPROVAL.
6. PROTECT FINISHED PART BY BAGGING OR SIMILAR METHOD TO PROTECT AND MAINTAIN CLEANLINESS DURING SHIPMENT AND STORAGE.
7. VENDOR SUGGESTED CHANGES TO TOLERANCES TO FACILITATE ASSEMBLY; SUBJECT TO LBNL APPROVAL
8. DIMENSIONS SHOWN IN THE INSPECTION OVAL ARE REFERENCED IN THE FABRICATION TRAVELER.
9. ALL COMPONENTS TO BE INSULATED PER MLI SPECIFICATION PROVIDED BY THE VENDOR, SUBJECT TO LBNL APPROVAL.

ITEM	PART NO	REQD	DESCRIPTION	MATERIAL
34	-	1	4.5" CF NON-ROTATABLE, WELD FLANGE FOR 2.5 DIA PIPE	SS 304L
33	-	32	SCH, M6X1, 30 LG, VENTED, SILVER PLATED	SS 18-8
32	-	8	SCH, 1/2 UNC X 1.0 LG, SILVER PLATE	SS 18-8
31	-	32	LOCK WASHER, M6	SS
30	-	10	CHIMNEY THERMAL ANCHOR, MIN A/L=.09"	COPPER, OFHC, C101
29	251074	2	THERMAL SHIELD STUB	COPPER, OFHC, C101
28	251446	2	BASE RING	COPPER, OFHC C101
27	251591	1	THERMAL SHIELD ASSY, DFBXD/DFBXH	CDA101
26	-	1	DIAGNOSTIC PIPE, 1.0 PIPE	304L SS
25	-	1	CONFLAT, NON ROTATABLE, 2"	304L SS
24	-	1	VENT SLEEVE 3"PIPE	304L SS
23	25M865	10	WELD FLANGE, CHIMNEY TUBE	304L SS
22	25M864	1	VENT SLEEVE CAP	304L SS
21	25M855	2	DH SLEEVE CAP	304L SS
20	-	2	2.0" TUBE X 6.78 LG	304L SS
19	25M819	16	PLATE, 2 HOLE	304L SS
18	-	1	TUBE, 2.5 OD X .049 WALL	300 SERIES SS
17	25M817	1	BELLOWS, 2.5 BORE, HYSPAN FILE H-1339-2	300 SERIES SS
16	25M816	1	BELLOWS, 1.0 BORE	300 SERIES SS
15	25M816	1	BELLOWS, 1.0 BORE, HYSPAN FILE H-1339-1	300 SERIES SS
14	251334	6	M12 X 1.75 ROD, 9.04 LG	18-8 SS
13	251333	12	M12 X 1.75 ROD, 9.22 LG	18-8 SS
12	251332	6	M12 X 1.75 ROD, 10.75 LG	18-8 SS
11	251331	12	M12 X 1.75 ROD, 10.54 LG	18-8 SS
10	25M851	2	SHORT VERTICAL SUPPORT ASSEMBLY	-
9	25M850	2	LONG VERTICAL STRUT ROD ASSEMBLY	-
8	251241	1	DH VENT PIPE	-
7	251136	1	TOP PLATE WELDMENT IP2,8 RIGHT	-
6	251161	1	CHECK VALVE ASSY	-
5	251573	1	LIQUID HELIUM TANK - 10 PORT RIGHT	
4	251327	6	HTS CHIMNEY ASSY TOP	
3	251177	1	4 1/2" PUMPING PORT, CRYOGENIC DIAGNOSTIC ASSY.	
2	251175	4	VAPOR COOLED LEAD CHIMNEY ASSY	
1	251174	6	HTS CHIMNEY ASSY LOWER	

THIRD ANGLE PROJECTION

REV	DWG	CHK	ZONE	DATE	CHANGES
A	JDR	DPO		10/7/02	INITIAL RELEASE

UNLESS OTHERWISE SPECIFIED
TOLERANCES: X.X ± 0.1 FRAC. ± 1/64; X.XX ± 0.03 Angles ± 1.00°; X.XXX ± 0.010 FINISH 125 √rms
DO NOT SCALE PRINT
THREADS ARE CLASS 2
CHAMFER ENDS OF ALL SCREW TREADS 30°
CUT ROUND, 1.5 THREAD RELIEF ON MACHINED THREADS
BREAK EDGES .016 MAX. ON MACHINED WORK
REMOVE BURRS, WELD SPLATTER & LOOSE SCALE
IN ACCORDANCE WITH ASME Y14.5M & B46.1

SHOP ORDERS
ACCT NO. / NO. REQD / SER NO. / ISSD DATE / REQD DATE
SURFACE TREATMENT -
IDENT METHOD TAG
PROJECT NUMBER N/A
PROJECT NAME N/A
DWN BY M. KNOLLS DATE 29-Sep-02
CHK BY Jon Zbasnik DATE 04-APR-02
APR BY Jon Zbasnik DATE 04-APR-02

ERNEST ORLANDO LAWRENCE BERKELEY NATIONAL LABORATORY
UNIVERSITY OF CALIFORNIA - BERKELEY

LHC IR FEEDBOX
MAJOR ASSEMBLY
TOP PLATE WELDMENT SUBASSY IP2&8 RIGHT

MICROFILMED: | DWG. TYPE: ASSEM | SHOWN ON: 24C362 | SCALE: 1/4 | DO NOT SCALE PRINTS
PATENT CLEAR: | DESIGN ACCT. NO.: Z5LCE2 | CATEGORY CODE: LH2001 | DWG. NO.: 2511446 | SIZE: A | REV.: A
SHEET 1 OF 4

DWG. NO. 2511446 REV. A SH. 1

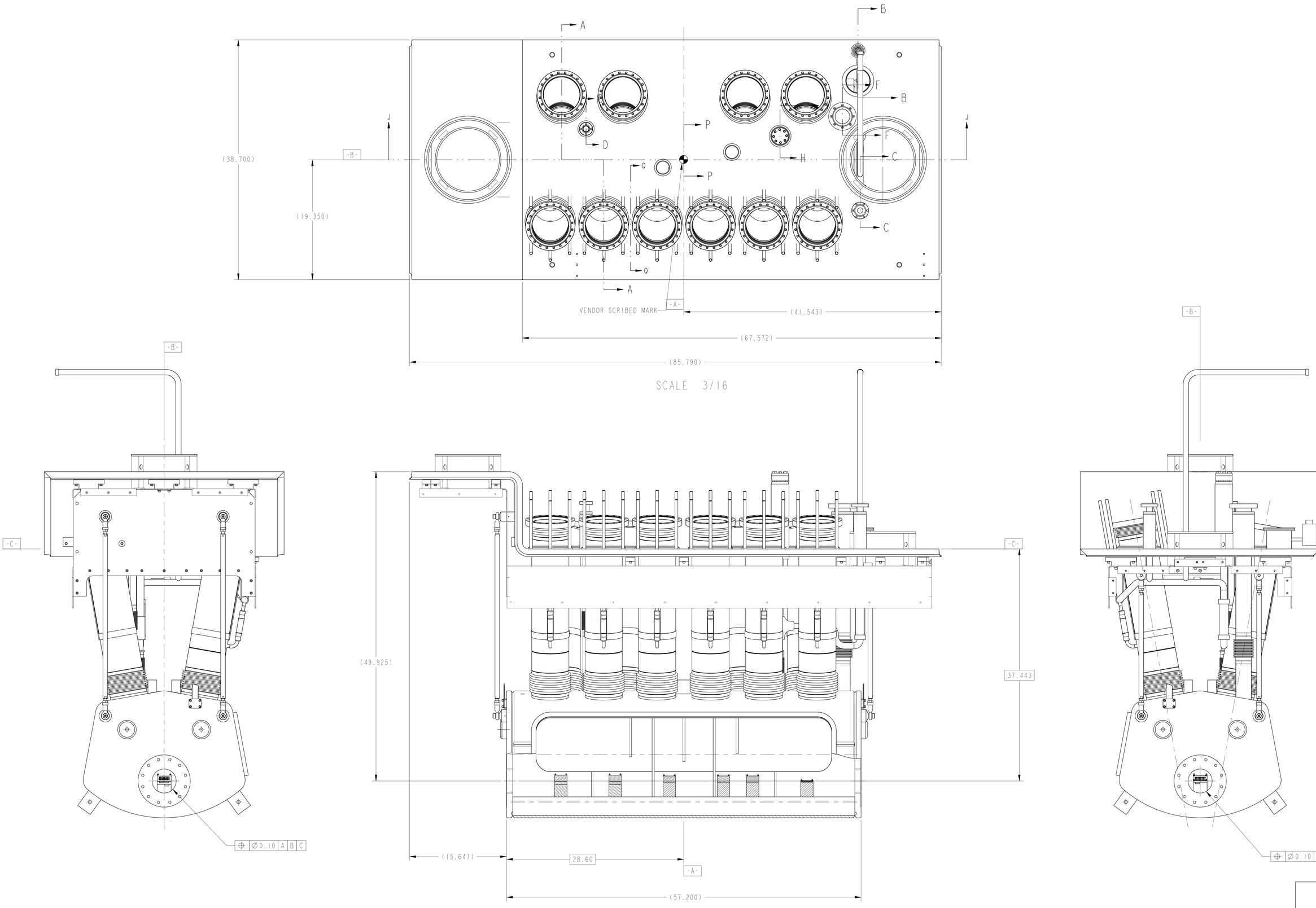

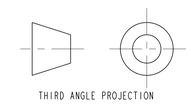

ERNEST ORLANDO LAWRENCE
BERKELEY NATIONAL LABORATORY
UNIVERSITY OF CALIFORNIA - BERKELEY

LHC IR FEEDBOX
MAJOR ASSEMBLY
TOP PLATE WELDMENT SUBASSY IP2&8 RIGHT

MICROFILMED:	DWG. TYPE	SHOWN ON	SCALE: 1/4	DO NOT SCALE PRINTS
	ASSEM	24C362	SHEET 2 OF 4	
PATENT CLEAR:	DESIGN ACCT. NO.	CATEGORY CODE	DWG. NO.	SIZE / REV.
	Z5LCE2	LH2001	2511446	A

DWG. NO. 2511446 SIZE A REV. 2 SH. 2

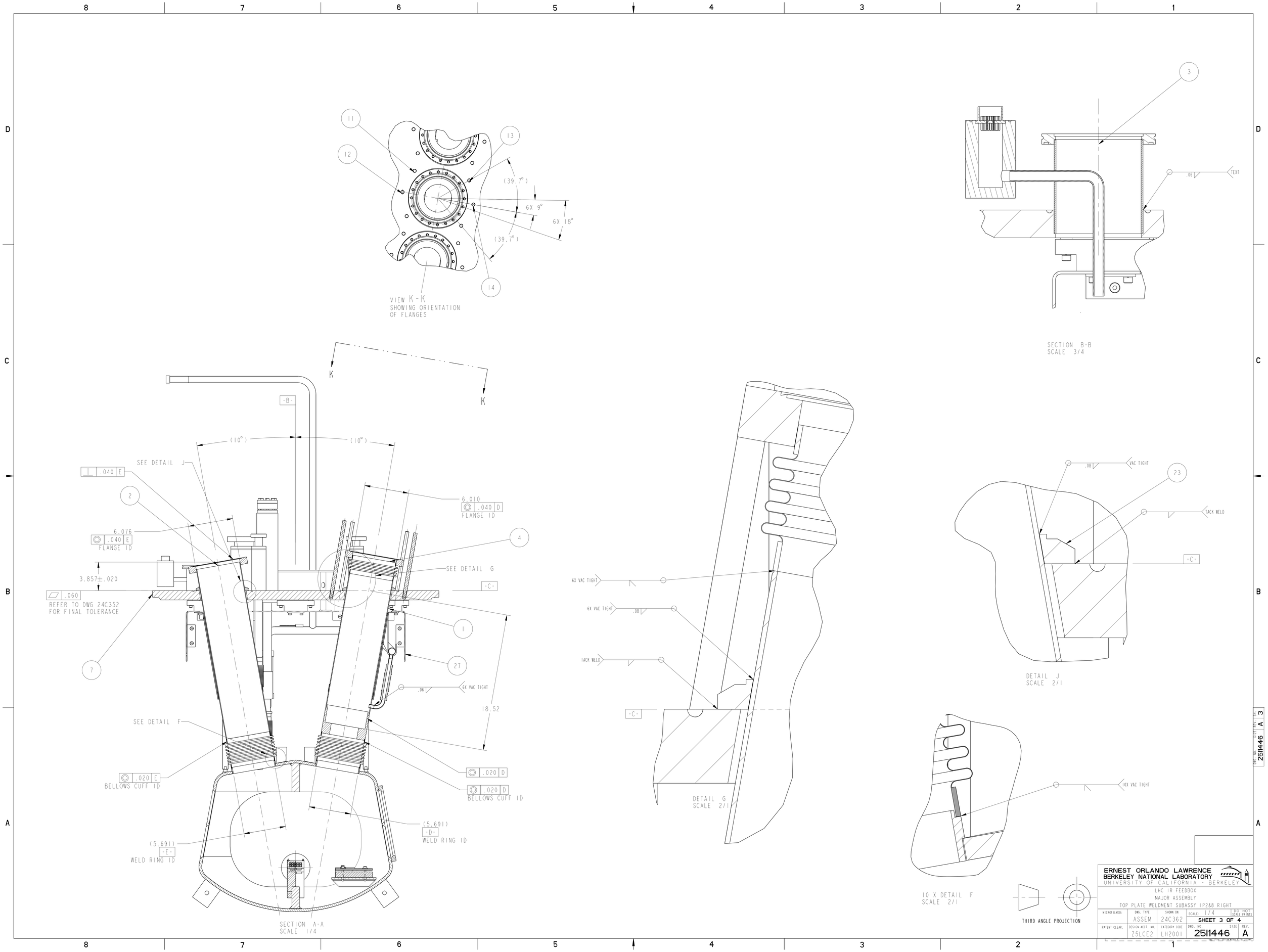

VIEW K-K
SHOWING ORIENTATION
OF FLANGES
(39.7°)
6X 9°
6X 18°
(39.7°)
SECTION B-B
SCALE 3/4
.06
TEXT
K
K
-B-
(10°)
(10°)
SEE DETAIL J
.040 E
6.010
.040 D
FLANGE ID
6.076
.040 E
FLANGE ID
3.857±.020
.060
REFER TO DWG 24C352
FOR FINAL TOLERANCE
SEE DETAIL G
-C-
6X VAC TIGHT
.06
18.52
SEE DETAIL F
.020 E
BELLOWS CUFF ID
.020 D
.020 D
BELLOWS CUFF ID
(5.691)
-D-
WELD RING ID
(5.691)
-E-
WELD RING ID
SECTION A-A
SCALE 1/4
6X VAC TIGHT
6X VAC TIGHT
.08
TACK WELD
-C-
DETAIL G
SCALE 2/1
.08
VAC TIGHT
TACK WELD
-C-
DETAIL J
SCALE 2/1
10X VAC TIGHT
10 X DETAIL F
SCALE 2/1
THIRD ANGLE PROJECTION
ERNEST ORLANDO LAWRENCE
BERKELEY NATIONAL LABORATORY
UNIVERSITY OF CALIFORNIA - BERKELEY
LHC IR FEEDBOX
MAJOR ASSEMBLY
TOP PLATE WELDMENT SUBASSY 1P2&8 RIGHT
MICROFILMED:
DWG. TYPE
ASSEM
SHOWN ON
24C362
SCALE: 1/4
DO NOT SCALE PRINTS
SHEET 3 OF 4
PATENT CLEAR:
DESIGN ACCT. NO.
Z5LCE2
CATEGORY CODE
LH2001
DWG. NO.
2511446
SIZE
REV.
A

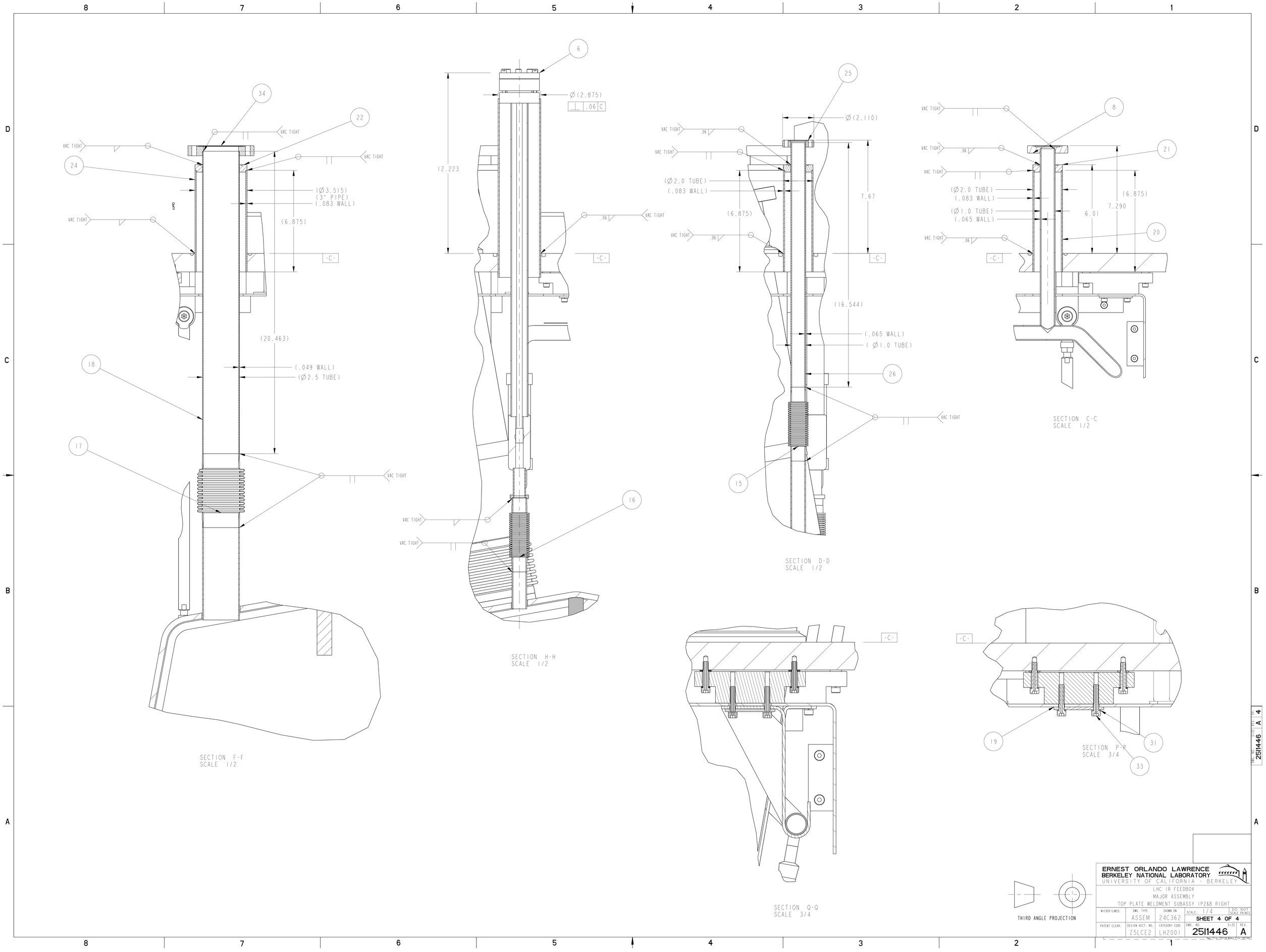

ERNEST ORLANDO LAWRENCE
BERKELEY NATIONAL LABORATORY
UNIVERSITY OF CALIFORNIA - BERKELEY

LHC IR FEEDBOX
MAJOR ASSEMBLY
TOP PLATE WELDMENT SUBASSY 1P2&8 RIGHT

MICROFILMED:	DWG. TYPE	SHOWN ON	SCALE: 1/4	DO NOT SCALE PRINTS
	ASSEM	24C362	SHEET 4 OF 4	
PATENT CLEAR:	DESIGN ACCT. NO.	CATEGORY CODE	DWG. NO.	SIZE / REV.
	Z5LCE2	LH2001	2511446	A

DWG. NO. 2511446 SIZE A REV. 4