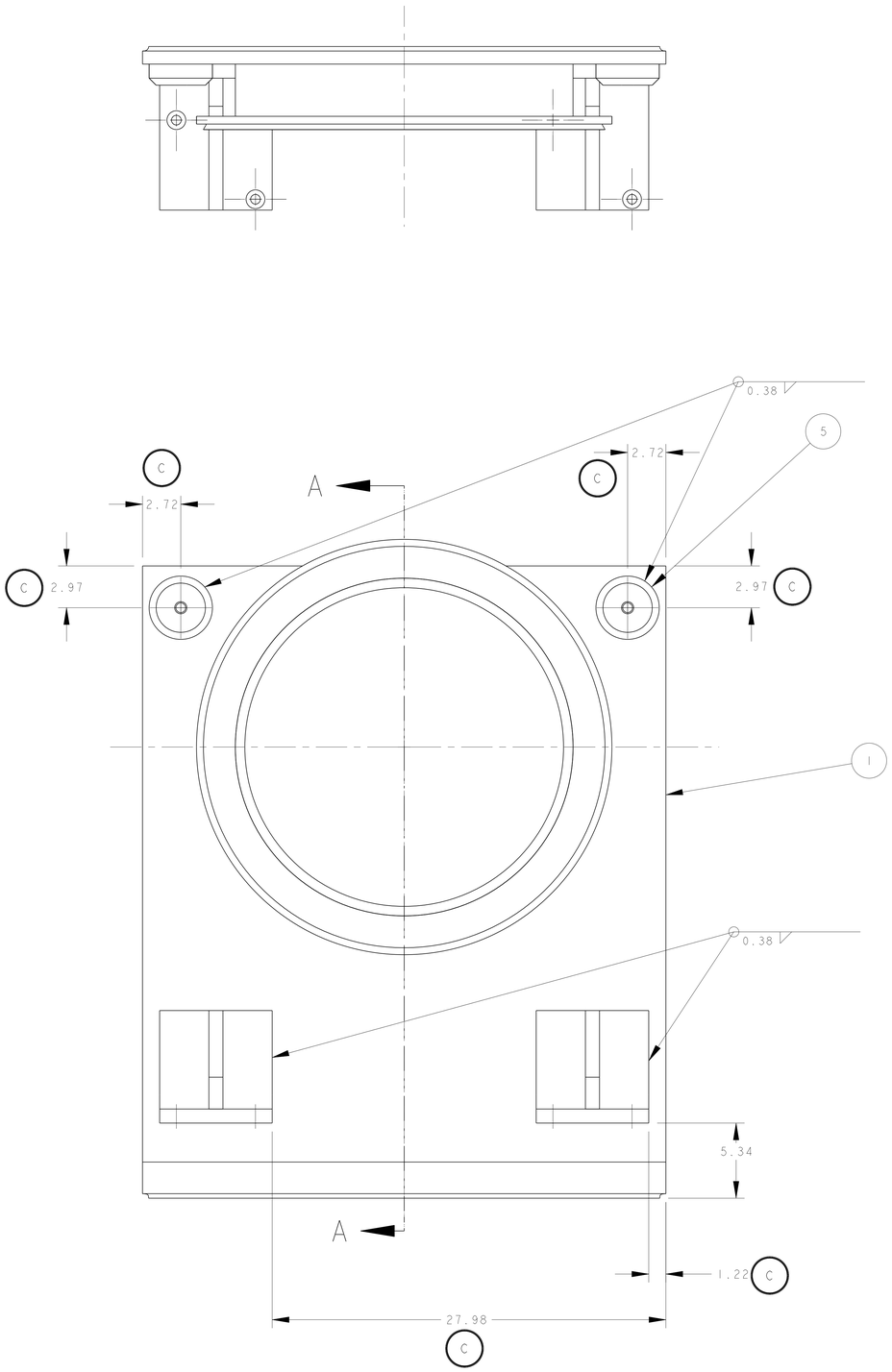

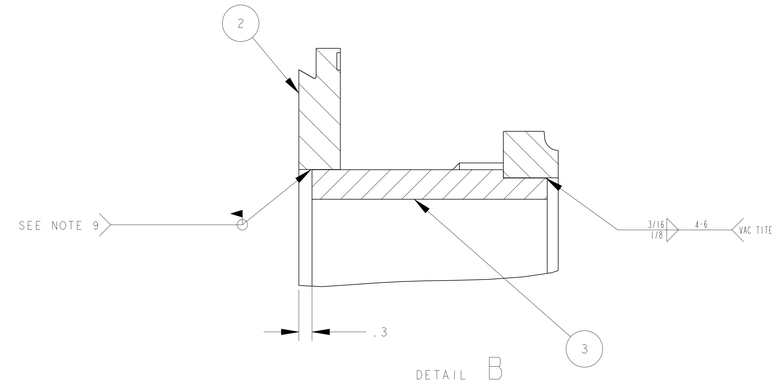

DETAIL B
SCALE 3/4

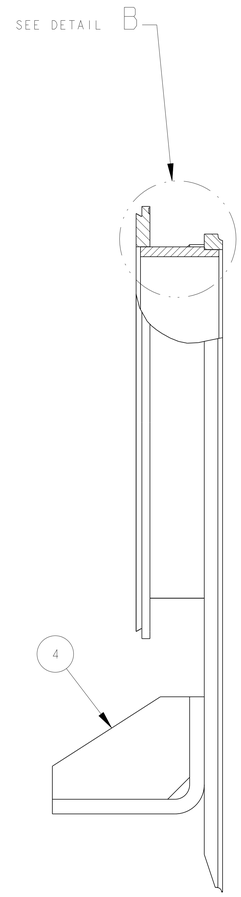

SECTION A - A

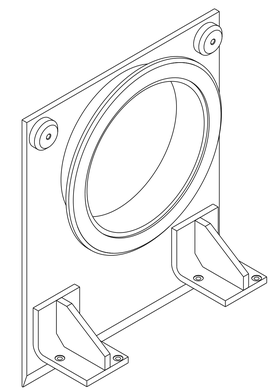

SCALE 1/8

NOTES: UNLESS OTHERWISE SPECIFIED,

1. DIMENSIONS AND TOLERANCING PER ANSI Y14.5M-1982 UNITS ARE IN INCHES UNLESS OTHERWISE SPECIFIED.
2. USE OF SULFUR OR SILICONE BEARING OILS, LUBRICANTS, OR COOLANTS ARE STRICTLY PROHIBITED
3. USE OF RESIN OR RUBBER BONDED ABRASIVES UNDER POWER IS STRICTLY PROHIBITED. USE VITREOUS BONDED ABRASIVES ONLY.
4. CLEAN AFTER MACHINING/WELDING PER VENDOR SPECIFICATION: SUBJECT TO LBNL APPROVAL.
5. VENDOR WELD SPECIFICATION SUBJECT TO LBNL APPROVAL.
6. VACUUM WELDS TO BE GTAW
7. PROTECT FINISHED PART BY BAGGING OR SIMILAR METHOD TO PROTECT AND MAINTAIN CLEANLINESS DURING SHIPMENT AND STORAGE.
8. ESTIMATED WEIGHT = 683 LBS
9. ITEM 2 IS WELDED AT FINAL ASSEMBLY. SEE FINAL ASSEMBLY FOR WELD CALLOUT

ITEM	PART NO	REQD	DESCRIPTION	MATERIAL
5	251181	2	MOUNTING PAD	304L STAINLESS
4	251165	2	JACK PAD WELDMENT	-
3	251132	1	DI FLANGE EXTENSION	304L SS
2	251131	1	DI FLANGE	304L SS
1	251130	1	DI FRONT PLATE	304L SS

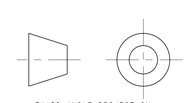

THIRD ANGLE PROJECTION

REV	DWG	CHK	ZONE	DATE	CHANGES
C	RLM	JPZ		9/9/03	CHANGED DI PLATE DETAIL 1.22 WAS 1.97; 27.98 WAS 28.73 2.97 WAS 3.72; 2.72 WAS 3.47
B	ARH	DPO		03/04/03	MINOR COSMETIC DRAWING CHANGES
A	RLM	DPO		10/4/02	INITIAL RELEASE

UNLESS OTHERWISE SPECIFIED

TOLERANCES		
	X.X ± 0.1	FRAC. ± 1/64
	X.XX ± 0.03	Angles ± 1.00°
	X.XXX ± 0.010	FINISH 125/

DO NOT SCALE PRINT

THREADS ARE CLASS 2
CHAMFER ENDS OF ALL SCREW TREADS 30°
CUT ROUND, 1.5 THREAD RELIEF ON MACHINED THREADS
BREAK EDGES .016 MAX. ON MACHINED WORK
REMOVE BURRS, WELD SPLATTER & LOOSE SCALE
IN ACCORDANCE WITH ASME Y14.5M & B46.1

SHOP ORDERS

ACCT NO.		NO. REQD	SER NO. -
			DATE ISSD -
DEL TO			DATE REQD -
SURFACE TREATMT	-		
IDENT METHOD	TAG		
PROJECT NUMBER	N/A		
PROJECT NAME	N/A		
DWG BY	M. KNOLLS		DATE 10-Aug-01
CHK BY	JON ZBASNIK		DATE 15-FEB-02
APR BY	JON ZBASNIK		DATE 15-FEB-02

ERNEST ORLANDO LAWRENCE
BERKELEY NATIONAL LABORATORY
UNIVERSITY OF CALIFORNIA - BERKELEY

LHC IR FEEDBOX
VACUUM
DI PLATE ASSY DFBX

MICROFILMED:	DWG. TYPE	SHOWN ON	SCALE: 1/4	DO NOT SCALE PRINTS
	ASSEM	-	SHEET 1 OF 1	
PATENT CLEAR:	DESIGN ACCT. NO.	CATEGORY CODE	DWG. NO.	SIZE / REV.
	Z5LCE2	LH2002	2511336	C

DWG. NO. 2511336 SIZE C REV. 1