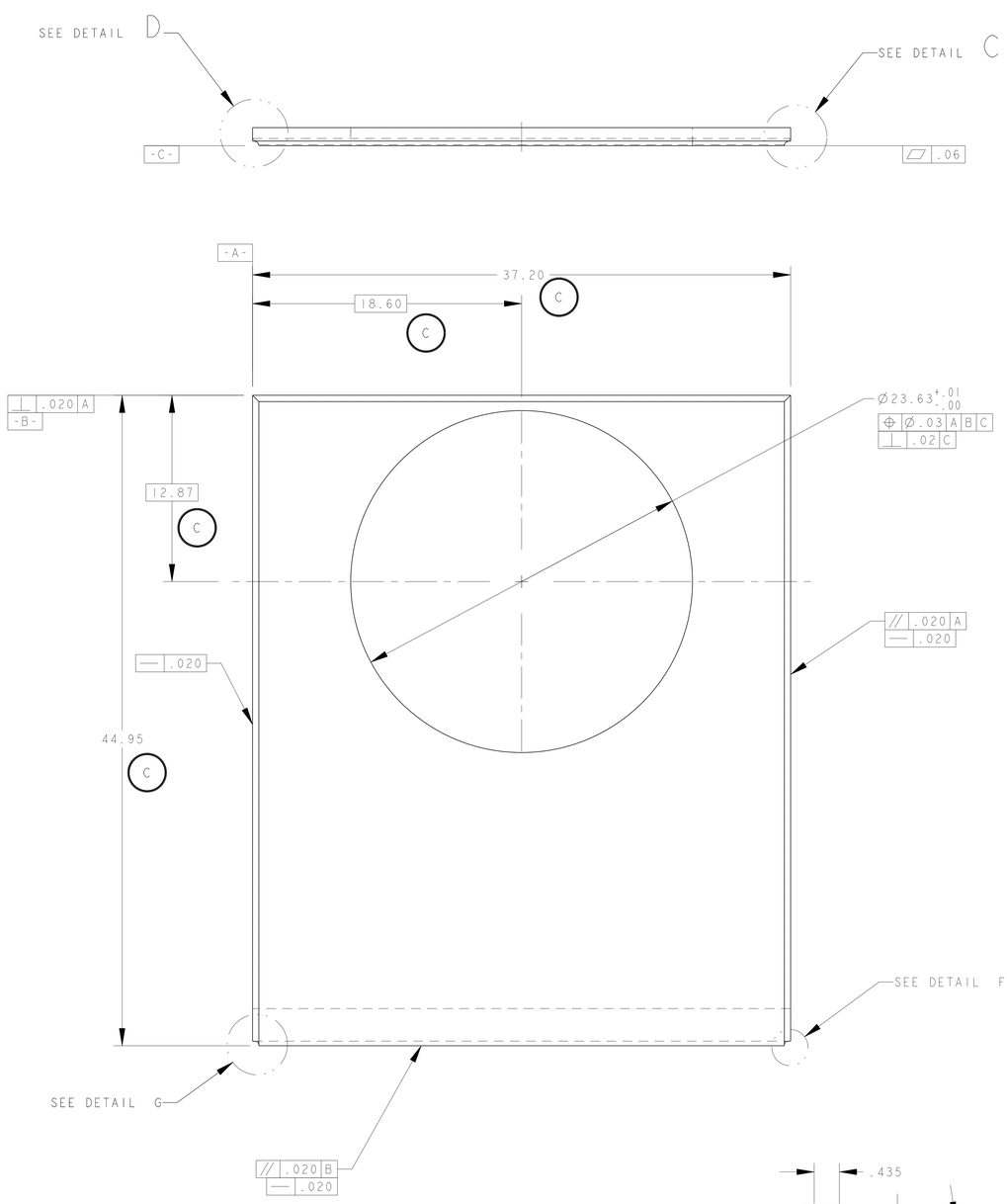

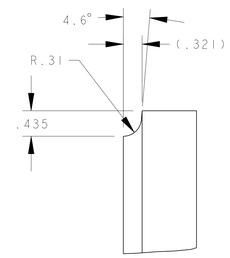

C DETAIL B
DETAIL C ROTATED 90 DEG°, MIRRORED
DETAIL D ROTATED 90°
SCALE 1/1

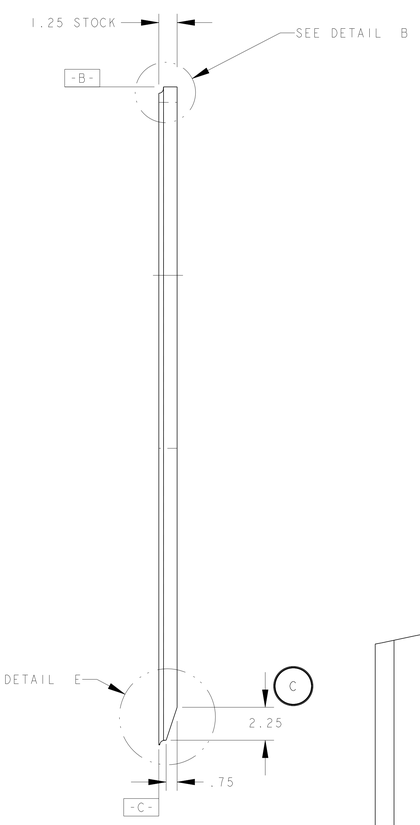

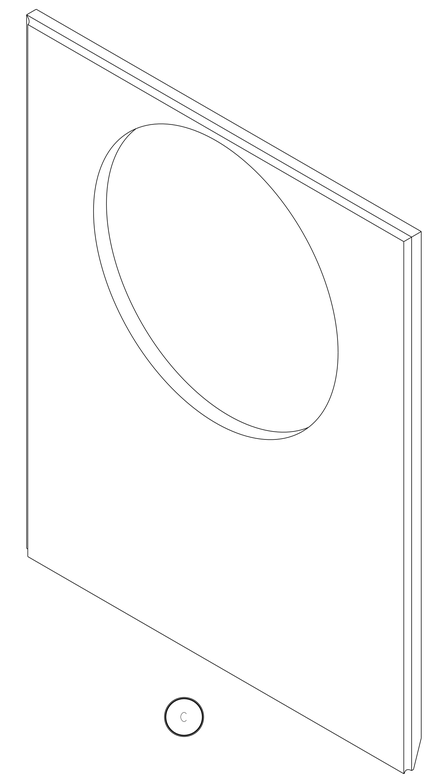

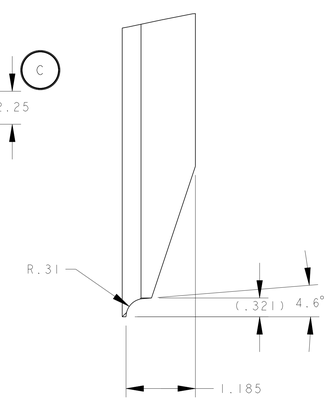

C DETAIL E
SCALE 1/1

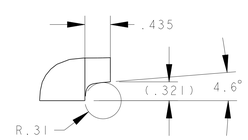

C CORNER CLEANUP
DETAIL F
DETAIL G, MIRROR IMAGE
SCALE 1/1

NOTES: UNLESS OTHERWISE SPECIFIED,

1. DIMENSIONS AND TOLERANCING PER ANSI Y14.5M-1982 UNITS ARE IN INCHES UNLESS OTHERWISE SPECIFIED.
2. USE OF SULFUR OR SILICONE BEARING OILS, LUBRICANTS, OR COOLANTS ARE STRICTLY PROHIBITED
3. USE OF RESIN OR RUBBER BONDED ADRASIVES UNDER POWER IS STRICTLY PROHIBITED. USE VITREOUS BONDED ABRASIVES ONLY.
4. CLEAN AFTER MACHINING PER VENDOR SPECIFICATION; SUBJECT TO LBNL APPROVAL.
5. PROTECT FINISHED PART BY BAGGING OR SIMILAR METHOD TO PROTECT AND MAINTAIN CLEANLINESS DURING SHIPMENT AND STORAGE.
6. ESTIMATED WEIGHT = 451 LBS

THIRD ANGLE PROJECTION

REV	DWG	CHK	ZONE	DATE	CHANGES
C	RLM	JPZ		9/9/03	44.95 WAS 45.70; 12.87 WAS 13.62 37.20 WAS 38.70; 18.60 WAS 19.35 CHANGED ALL WELD PREPS ADDED ISO VIEW; ADDED CHAMFER
B	ARH	DPO		03/05/03	MINOR COSMETIC DRAWING CHANGES
A	RLM	DPO		10-4-02	INITIAL RELEASE

DESCRIPTION	MATERIAL	MAT. LOCATION
1.25" PLATE, HOT ROLLED, ANNEALED, PICKELED, PER ASTM A240	304L SS	-

UNLESS OTHERWISE SPECIFIED
TOLERANCES: X.X ± 0.1 FRAC. ± 1/64; X.XX ± 0.03 Angles ± 1.00°; X.XXX ± 0.010 FINISH 125 √ (µin)
DO NOT SCALE PRINT
THREADS ARE CLASS 2.
CHAMFER ENDS OF ALL SCREW THEADS 30°
CUT ROUND, 1.5 THREAD RELIEF ON MACHINED THREADS
BREAK EDGES .015 MAX. ON MACHINED WORK
REMOVE BURRS, WELD SPLATTER & LOOSE SCALE
IN ACCORDANCE WITH ASME Y14.5M & B46.1

SHOP ORDERS
ACCT NO. / REQD / SEN NO. -
DEL NO. / DATE ISSD -
TO / DATE REQD -
SURFACE TREATMT -
IDENT METHOD TAG
PROJECT NUMBER N/A
PROJECT NAME N/A
DWN BY M. MNOLLS DATE 15-Feb-02
CHK BY J ZBASNIK DATE 15-Feb-02
APR BY J ZBASNIK DATE 15-Feb-02

ERNEST ORLANDO LAWRENCE
BERKELEY NATIONAL LABORATORY
UNIVERSITY OF CALIFORNIA . BERKELEY

LHC IR FEEDBOX
VACUUM
DI FRONT PLATE

MICROFILMED: | DWG. TYPE: PART | SHOWN ON: - | SCALE: 1/4 | DO NOT SCALE PRINTS
PATENT CLEAR: | DESIGN ACCT. NO.: Z5LCE2 | CATEGORY CODE: LH2002 | DWG. NO.: 2511306 | SIZE: C | REV.: C
SHEET 1 OF 1

DWG. NO. 2511306 SIZE C REV. C SH. 1