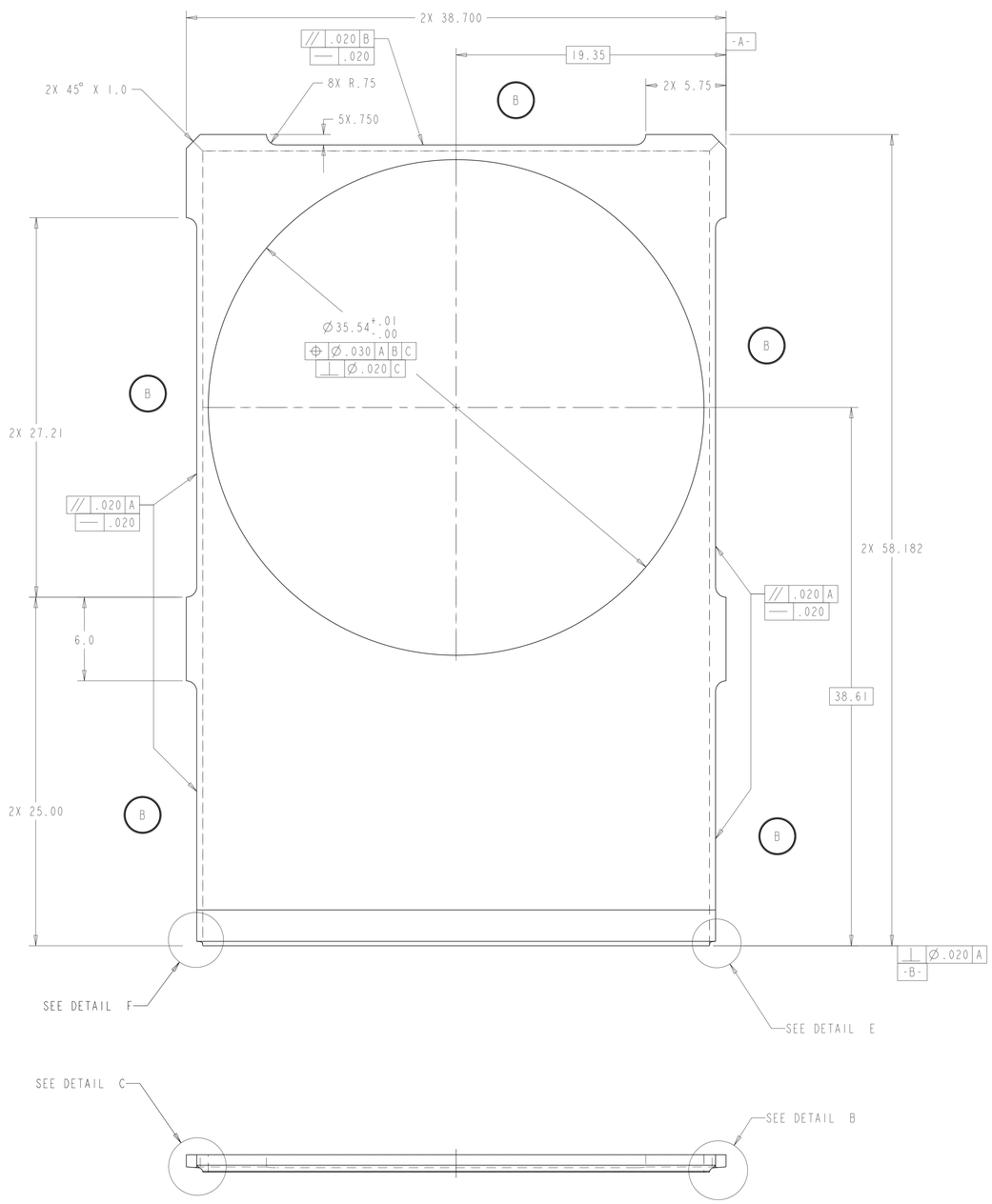

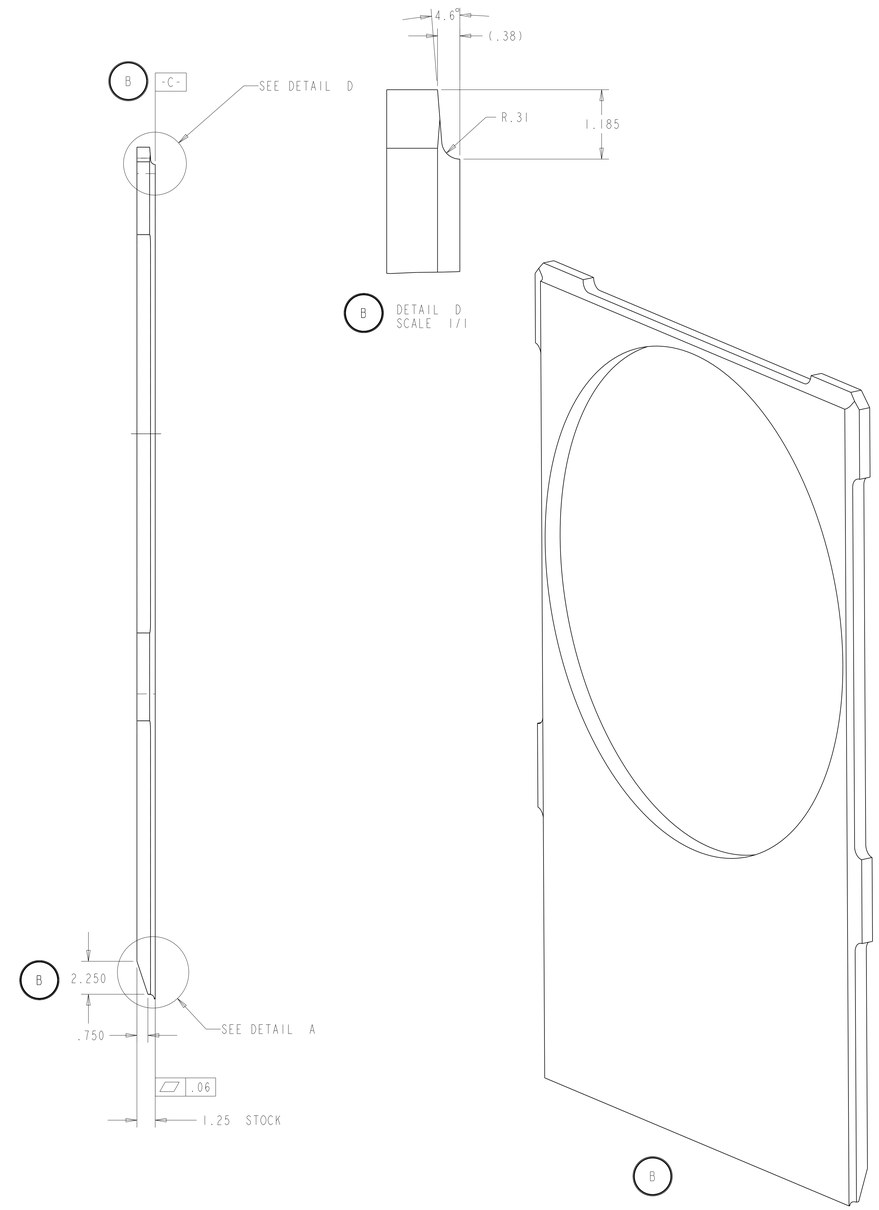

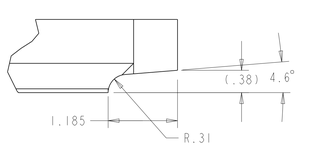

DETAIL B
DETAIL C MIRROR IMAGE
SCALE 1/1

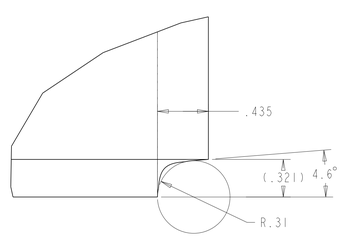

CORNER CLEANUP
DETAIL E
DETAIL F MIRROR IMAGE
SCALE 2/1

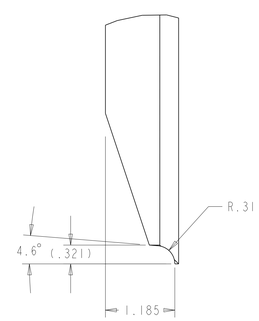

DETAIL A
SCALE 1/1

NOTES: UNLESS OTHERWISE SPECIFIED,

1. DIMENSIONS AND TOLERANCING PER ANSI Y14.5M-1982 UNITS ARE IN INCHES UNLESS OTHERWISE SPECIFIED.
2. USE OF SULFUR OR SILICONE BEARING OILS, LUBRICANTS, OR COOLANTS ARE STRICTLY PROHIBITED
3. USE OF RESIN OR RUBBER BONDED ADRASIVES UNDER POWER IS STRICTLY PROHIBITED. USE VITREOUS BONDED ABRASIVES ONLY.
4. CLEAN AFTER MACHINING PER VENDOR SPECIFICATION; SUBJECT TO LBNL APPROVAL.
5. PROTECT FINISHED PART BY BAGGING OR SIMILAR METHOD TO PROTECT AND MAINTAIN CLEANLINESS DURING SHIPMENT AND STORAGE.
6. ESTIMATED WEIGHT = 429 LBS

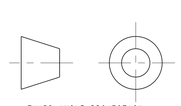

THIRD ANGLE PROJECTION

REV	DWG	CHK	ZONE	DATE	CHANGES
B	RLM	JPZ		9/9/03	CHANGED ALL WELD PREPS; ADDED CUT OUTS ADDED CHAMFER CUT; MOVED DATUM C ADDED ISO VIEW
A	RLM	DPO		10-4-02	INITIAL RELEASE

DESCRIPTION	MATERIAL	MAT. LOCATION
1.25" STOCK PLATE, HOT ROLLED, ANNEALED, PICKLED, ASTM AS240	304L SS	-

UNLESS OTHERWISE SPECIFIED
TOLERANCES: X.X ± 0.1 FRAC. ± 1/64; X.XX ± 0.03 Angles ± 1.00°; X.XXX ± 0.010 FINISH 125/ 1.25
DO NOT SCALE PRINT
THREADS ARE CLASS 2
CHAMFER ENDS OF ALL SCREW THREADS 30°
CUT ROUND, 1.5 THREAD RELIEF ON MACHINED THREADS
BREAK EDGES .016 MAX. ON MACHINED WORK
REMOVE BURRS, WELD SPLATTER & LOOSE SCALE
IN ACCORDANCE WITH ASME Y14.5M & B46.1

SHOP ORDERS
ACCT NO. | NO. REQD | SER NO. | DATE ISSD | DEL TO | DATE REQD
SURFACE TREATMT -
IDENT METHOD TAG
PROJECT NUMBER N/A
PROJECT NAME N/A
DWG BY A. ZACHOSZCZ DATE 13-Aug-01
CHK BY J ZBASNIK DATE 15-Feb-02
APR BY J ZBASNIK DATE 15-Feb-02

ERNEST ORLANDO LAWRENCE
BERKELEY NATIONAL LABORATORY
UNIVERSITY OF CALIFORNIA - BERKELEY

LHC IR FEEDBOX
VACUUM
Q3 FRONT PLATE

MICROFILMED: | DWG. TYPE PART | SHOWN ON - | SCALE: 1/4 | DO NOT SCALE PRINTS
PATENT CLEAR: | DESIGN ACCT. NO. Z5LCE2 | CATEGORY CODE LH2002 | DWG. NO. 2511266 | SIZE B | REV. B
SHEET 1 OF 1

DWG. NO. 2511266 SIZE B REV. 1