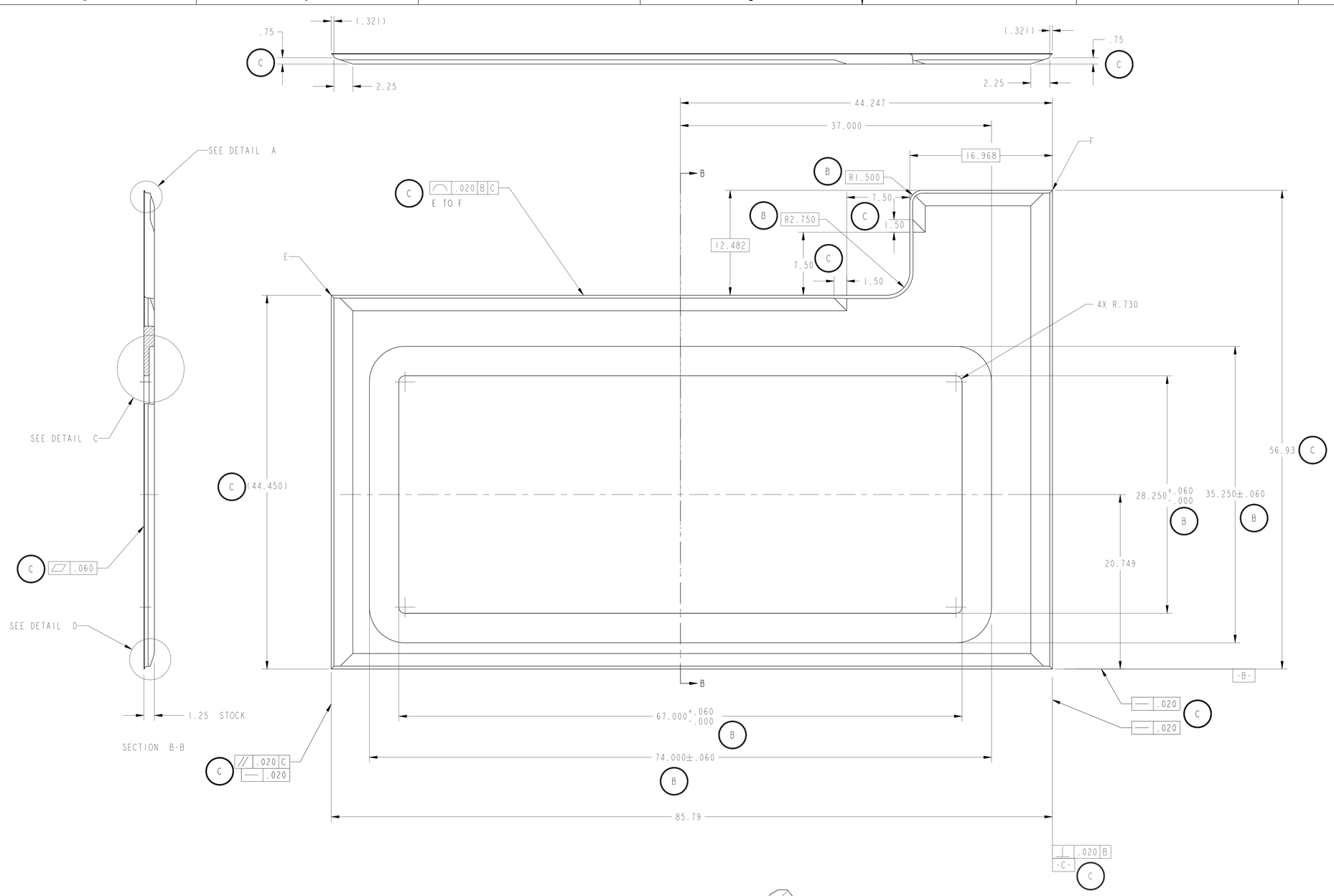

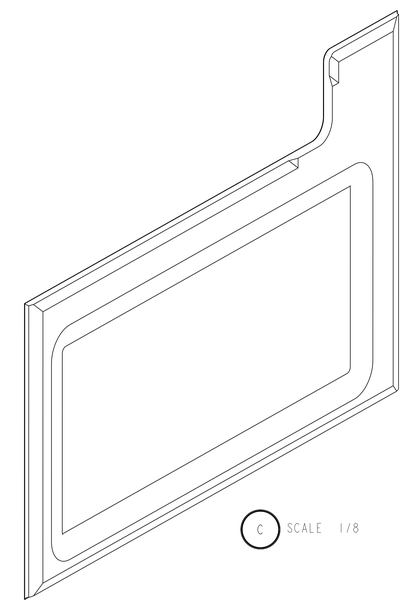

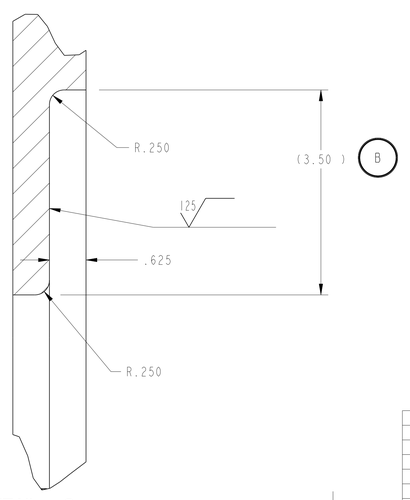

DETAIL C
COVER PLATE POCKET & WELD PREP
ALL AROUND
SCALE 1/1

THIRD ANGLE PROJECTION

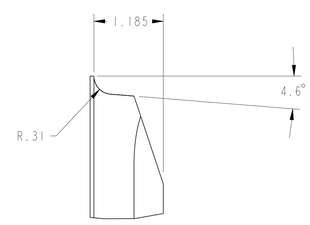

DETAIL A
WELD PREP - ALL EDGES
SCALE 1/1

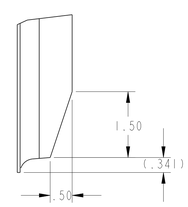

DETAIL D
SCALE 3/4
4 PLACES

NOTES: UNLESS OTHERWISE SPECIFIED,

1. DIMENSIONS AND TOLERANCING PER ANSI Y14.5M-1982 UNITS ARE IN INCHES UNLESS OTHERWISE SPECIFIED.
2. USE OF SULFUR OR SILICONE BEARING OILS, LUBRICANTS, OR COOLANTS ARE STRICTLY PROHIBITED
3. USE OF RESIN OR RUBBER BONDED ADRASIVES UNDER POWER IS STRICTLY PROHIBITED. USE VITREOUS BONDED ABRASIVES ONLY.
4. CLEAN AFTER MACHINING PER VENDOR SPECIFICATION; SUBJECT TO LBNL VENDOR APPROVAL.
5. PROTECT FINISHED PART BY BAGGING OR SIMILAR METHOD TO PROTECT AND MAINTAIN CLEANLINESS DURING SHIPMENT AND STORAGE.
6. ESTIMATED WEIGHT = 672 LBS WITH ACCESS PANEL CUTOUT
   ESTIMATED WEIGHT = 1,400 LBS WITHOUT ACCESS PANEL CUTOUT
7. TEMPORARY LIFTING FEATURES NOT SHOWN. TO BE PROVIDED BY VENDOR AND REMOVED PRIOR TO SHIPMENT

REV	DWG	CHK	ZONE	DATE	CHANGES
C	RLM	JPZ		9/9/03	ADD WELD PREP CHAMFERS ADD ISO VIEW; ADD TOP VIEW; ADD DET D CHANGED GTOLS AND DIMS
B	JDR	DPO		02-10-03	REMOVED WELD_PREP, CHANGED RADIUS CHANGE CUTOUT DIMENSIONS AND LOOSENED TOLERANCES
A	RLM	DPO		10-4-02	INITIAL RELEASE

DESCRIPTION	MATERIAL	MAT. LOCATION
PLATE, 1.25 THK., HOT ROLLED, ANNEALED AND PICKELED PER ASTM A240	304L SS	-

UNLESS OTHERWISE SPECIFIED
TOLERANCES: X.X ± 0.1 FRAC. ± 1/64; X.XX ± 0.03 Angles ± 1.00°; X.XXX ± 0.010 FINISH 125 √
DO NOT SCALE PRINT
THREADS ARE CLASS 2
CHAMFER ENDS OF ALL SCREW THREADS 30°
CSK ROUND, 1.5 THREAD RELIEF ON MACHINED THREADS
BREAK EDGES .016 MAX. ON MACHINED WORK
REMOVE BURRS, WELD SPLATTER & LOOSE SCALE
IN ACCORDANCE WITH ASME Y14.5M & B46.1

SHOP ORDERS
ACCT NO. / NO. REQD / DATE ISSD
SEL TO / DATE REQD
SURFACE TREATMT / IDENT METHOD: TAG
PROJECT NUMBER: N/A
PROJECT NAME: N/A
DWG BY: A. ZACHOSZCZ DATE 27-Nov-01
CHK BY: J ZBASNIK DATE 15-Feb-02
APR BY: J ZBASNIK DATE 15-Feb-02

ERNEST ORLANDO LAWRENCE BERKELEY NATIONAL LABORATORY
UNIVERSITY OF CALIFORNIA - BERKELEY

LHC IR FEEDBOX
VACUUM
INSIDE, LEFT SIDE PLATE

MICROFILMED: | DWG. TYPE: PART | SHOWN ON | SCALE: ~3/16 | DO NOT SCALE PRINTS
PATENT CLEAR: | DESIGN ACCT. NO.: Z5LCE2 | CATEGORY CODE: LH2002 | DWG. NO.: 2511246 | SIZE: C | REV.: C
SHEET 1 OF 1

DWG. NO. 2511246 SIZE C REV 1