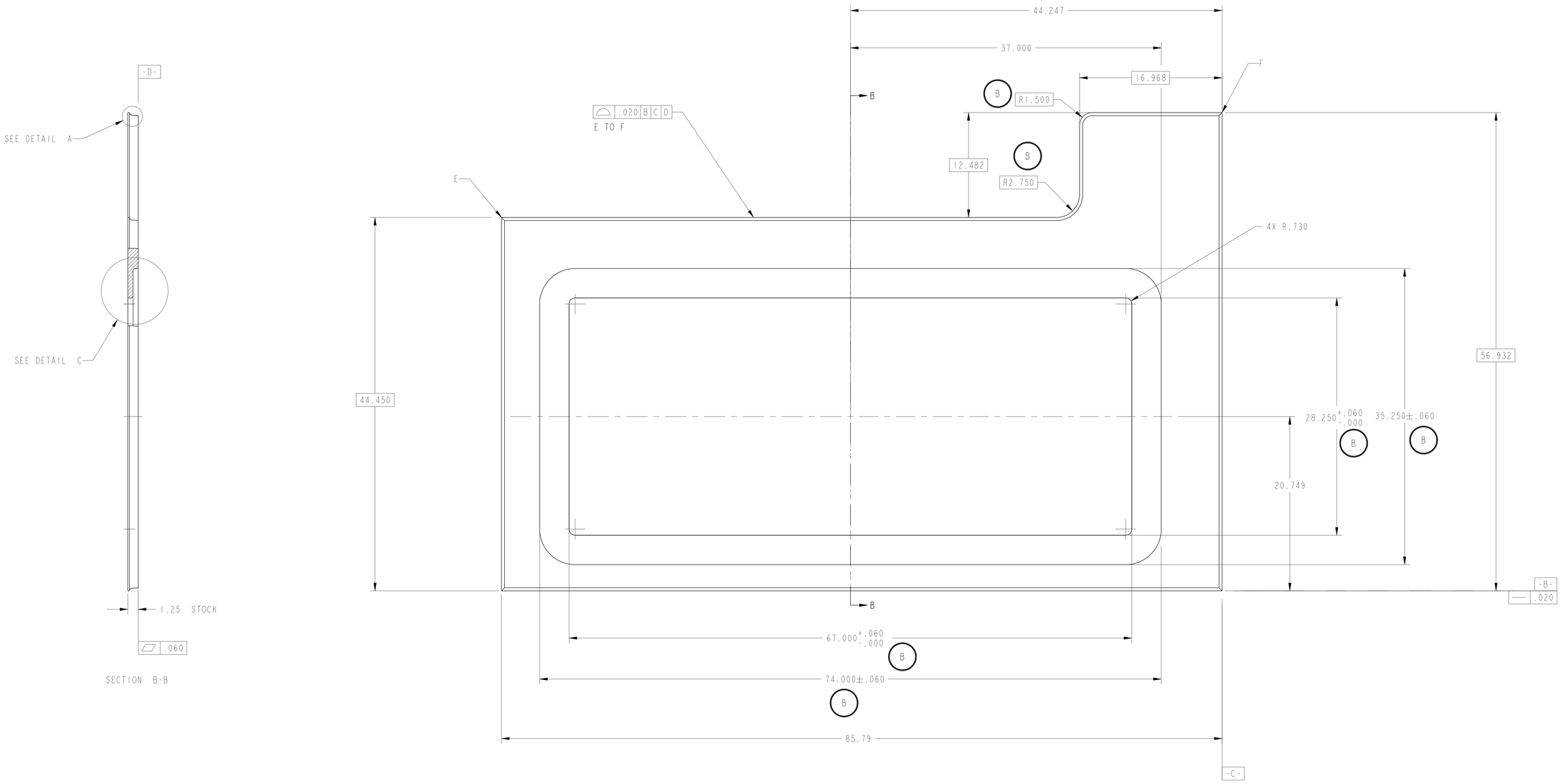

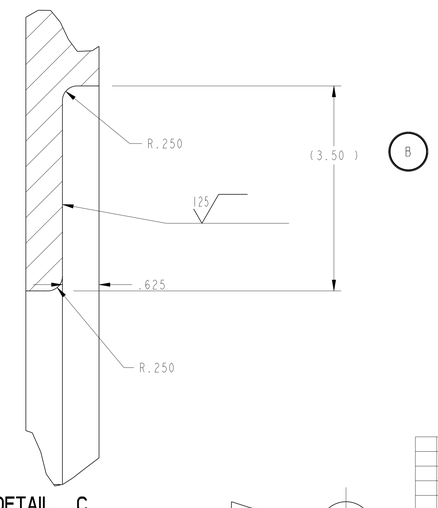

DETAIL C
COVER PLATE POCKET & WELD PREP
ALL AROUND
SCALE 1/1

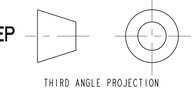

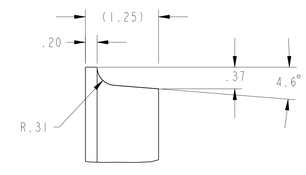

DETAIL A
WELD PREP - ALL EDGES
SCALE 1/1

NOTES: UNLESS OTHERWISE SPECIFIED,

1. DIMENSIONS AND TOLERANCING PER ANSI Y14.5M-1982 UNITS ARE IN INCHES UNLESS OTHERWISE SPECIFIED.
2. USE OF SULFUR OR SILICONE BEARING OILS, LUBRICANTS, OR COOLANTS ARE STRICTLY PROHIBITED
3. USE OF RESIN OR RUBBER BONDED ADRASIVES UNDER POWER IS STRICTLY PROHIBITED. USE VITREOUS BONDED ABRASIVES ONLY.
4. CLEAN AFTER MACHINING PER VENDOR SPECIFICATION; SUBJECT TO LBNL VENDOR APPROVAL.
5. PROTECT FINISHED PART BY BAGGING OR SIMILAR METHOD TO PROTECT AND MAINTAIN CLEANLINESS DURING SHIPMENT AND STORAGE.
6. ESTIMATED WEIGHT = 672 LBS WITH ACCESS PANEL CUTOUT
   ESTIMATED WEIGHT = 1,400 LBS WITHOUT ACCESS PANEL CUTOUT
7. TEMPORARY LIFTING FEATURES NOT SHOWN. TO BE PROVIDED BY VENDOR AND REMOVED PRIOR TO SHIPMENT

REV	DWG	CHK	ZONE	DATE	CHANGES
B	JDR	DPO		02-18-03	REMOVED WELD_PREP, CHANGED RADIUS CHANGE CUTOUT DIMENSIONS AND LOOSENED TOLERANCES
A	RLM	DPO		10-4-02	INITIAL RELEASE

DESCRIPTION	MATERIAL	MAT. LOCATION
PLATE, 1.25 THK., HOT ROLLED, ANNEALED AND PICKELED PER ASTM A240	304L SS	-

UNLESS OTHERWISE SPECIFIED
TOLERANCES: X.X ± 0.1 | FRAC. ± 1/64 | X.XX ± 0.03 | Angles ± 1.00° | X.XXX ± 0.010 | FINISH 125/ | DO NOT SCALE PRINT
THREADS ARE CLASS 2
CHAMFER ENDS OF ALL SCREW TREADS 30°
CUT ROUND, 1.5 THREAD RELIEF ON MACHINED THREADS
BREAK EDGES .016 MAX. ON MACHINED WORK
REMOVE BURRS, WELD SPLATTER & LOOSE SCALE
IN ACCORDANCE WITH ASME Y14.5M & B46.1

SHOP ORDERS
ACCT NO. | NO. REQD | SER NO. | DATE ISSD | DATE REQD
DEL TO
SURFACE TREATMT
IDENT METHOD TAG
PROJECT NUMBER N/A
PROJECT NAME N/A
DWG BY A. ZACHOSZCZ | DATE 27-Nov-01
CHK BY J ZBASNIK | DATE 15-Feb-02
APR BY J ZBASNIK | DATE 15-Feb-02

ERNEST ORLANDO LAWRENCE BERKELEY NATIONAL LABORATORY
UNIVERSITY OF CALIFORNIA - BERKELEY
LHC IR FEEDBOX
VACUUM
INSIDE, LEFT SIDE PLATE

MICROFILMED: | DWG. TYPE PART | SHOWN ON | SCALE: ~3/16 | DO NOT SCALE PRINTS
SHEET 1 OF 1
PATENT CLEAR: | DESIGN ACCT. NO. Z5LCE2 | CATEGORY CODE LH2002 | DWG. NO. 2511246 | SIZE B | REV. B

DWG. NO. 2511246 | SIZE B | REV. 1