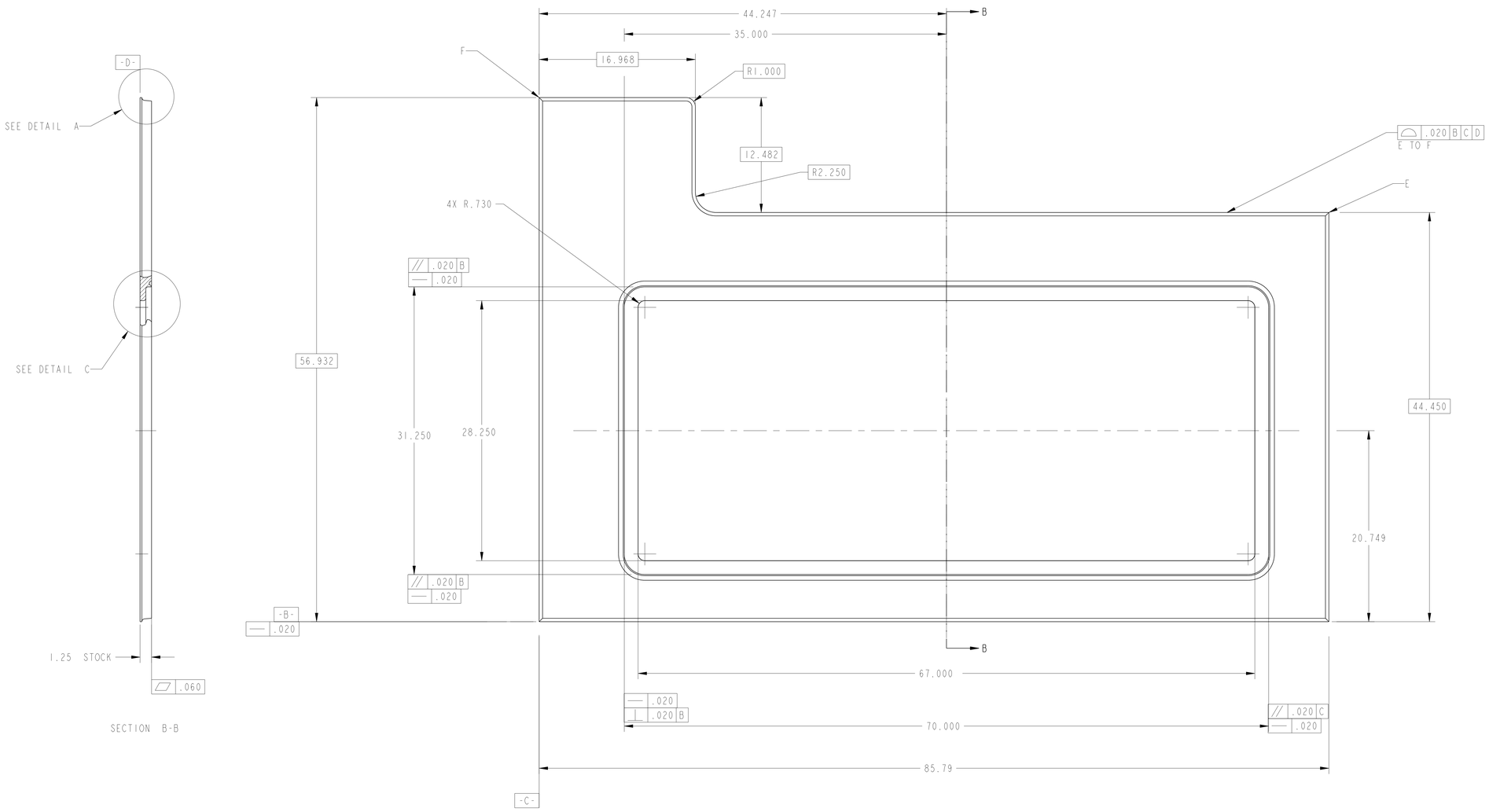

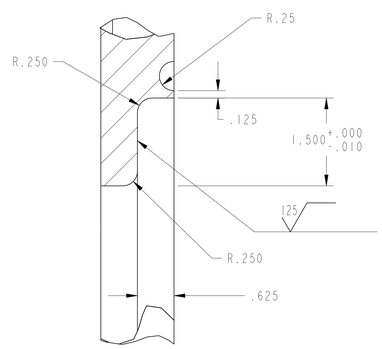

DETAIL C
COVER PLATE POCKET & WELD PREP
SCALE 1/1

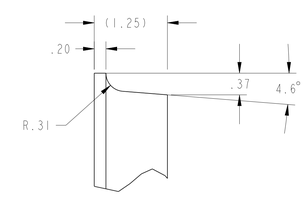

DETAIL A
WELD PREP - ALL EDGES
SCALE 1/1

NOTES: UNLESS OTHERWISE SPECIFIED,

1. DIMENSIONS AND TOLERANCING PER ANSI Y14.5M-1982 UNITS ARE IN INCHES UNLESS OTHERWISE SPECIFIED.
2. USE OF SULFUR OR SILICONE BEARING OILS, LUBRICANTS, OR COOLANTS ARE STRICTLY PROHIBITED
3. USE OF RESIN OR RUBBER BONDED ADRASIVES UNDER POWER IS STRICTLY PROHIBITED. USE VITREOUS BONDED ABRASIVES ONLY.
4. VENDOR TO PROVIDE CLEANING SPECIFICATIONS PRIOR TO WELDING FOR LBL APPROVAL.
5. PROTECT FINISHED PART BY BAGGING OR SIMILAR METHOD TO PROTECT AND MAINTAIN CLEANLINESS DURING SHIPMENT AND STORAGE.
6. ESTIMATED WEIGHT = 751 LBS WITH ACCESS PANEL CUTOUT
   ESTIMATED WEIGHT = 1,403 LBS WITHOUT ACCESS PANEL CUTOUT
7. TEMPORARY LIFTING FEATURES NOT SHOWN. TO BE PROVIDED BY VENDOR AND REMOVED PRIOR TO SHIPMENT

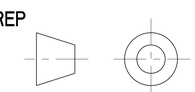

THIRD ANGLE PROJECTION

REV	DWG	CHK	ZONE	DATE	CHANGES
A	MJK	DPO		9/17/02	INITIAL RELEASE

UNLESS OTHERWISE SPECIFIED
TOLERANCES: X.X ± 0.1 FRAC. ± 1/64; X.XX ± 0.03 Angles ± 1.00°; X.XXX ± 0.010 FINISH 125/
DO NOT SCALE PRINT
THREADS ARE CLASS 2
CHAMFER ENDS OF ALL SCREW TREADS 30°
CUT ROUND, 1.5 THREAD RELIEF ON MACHINED THREADS
BREAK EDGES .016 MAX. ON MACHINED WORK
REMOVE BURRS, WELD SPLATTER & LOOSE SCALE
IN ACCORDANCE WITH ASME Y14.5M & B46.1

SHOP ORDERS
ACCT NO. | NO. REQD | SER NO. -
DEL TO | DATE ISSD -
SURFACE TREATMT -
IDENT METHOD TAG
PROJECT NUMBER N/A
PROJECT NAME N/A
DWG BY A. ZACHOSZCZ DATE 27-Nov-01
CHK BY JON ZBASNIK DATE 15-FEB-02
APR BY JON ZBASNIK DATE 15-FEB-02

DESCRIPTION	MATERIAL	MAT. LOCATION
PLATE, 1.25 THK., HOT ROLLED, ANNEALED AND PICKELED PER ASTM A240	304L SS	-

ERNEST ORLANDO LAWRENCE BERKELEY NATIONAL LABORATORY
UNIVERSITY OF CALIFORNIA - BERKELEY
LHC IR FEEDBOX
VACUUM
INSIDE, RIGHT SIDE PLATE

MICROFILMED: | DWG. TYPE PART | SHOWN ON | SCALE: ~3/16 | DO NOT SCALE PRINTS
PATENT CLEAR: | DESIGN ACCT. NO. Z5LCE2 | CATEGORY CODE LH2002 | SHEET 1 OF 1 | DWG. NO. 2511236 | SIZE A | REV. A

DWG. NO. 2511236 | SIZE A | REV. A | SH. 1