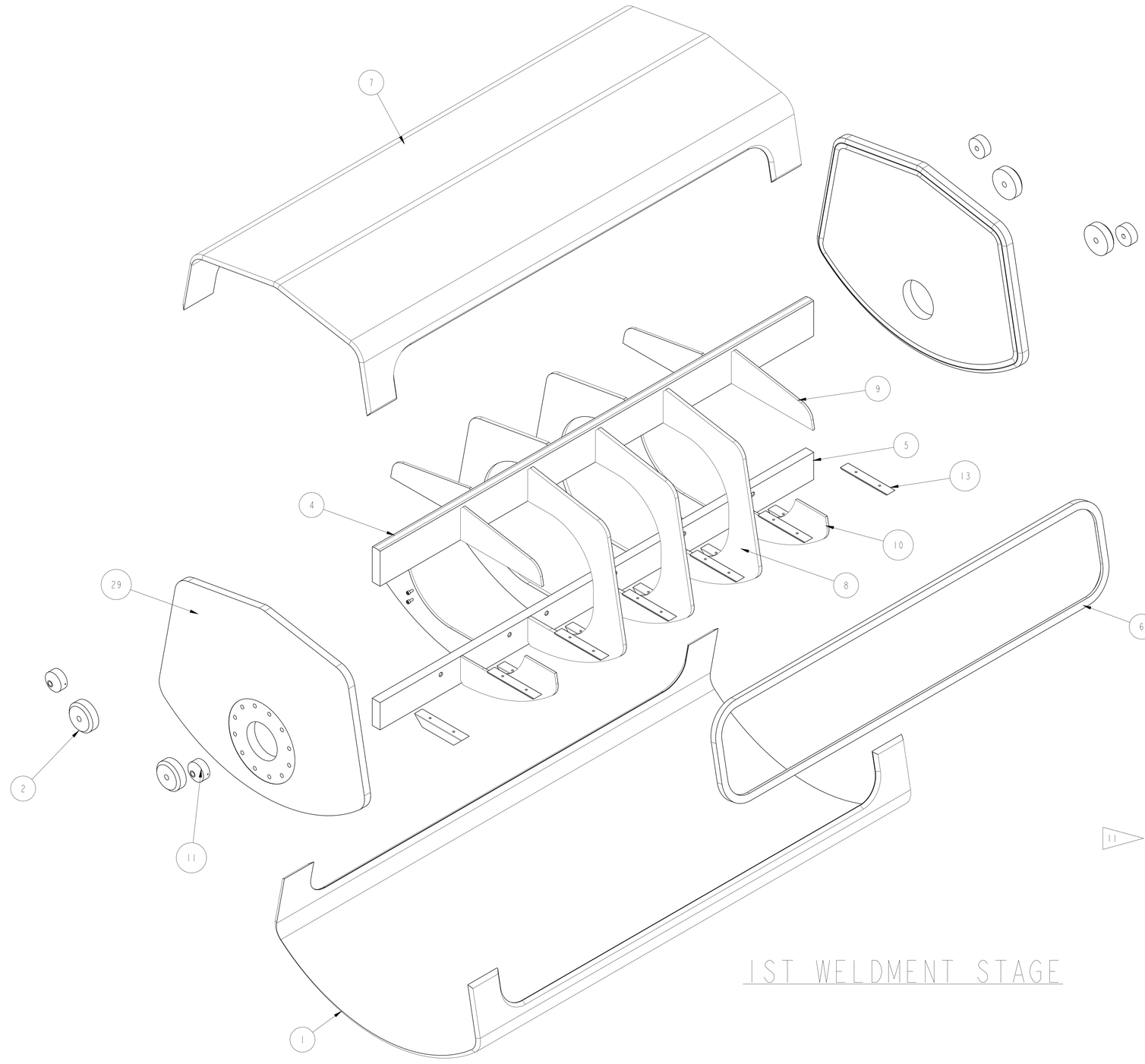

IST WELDMENT STAGE

NOTES: UNLESS OTHERWISE SPECIFIED,

1. DIMENSIONS AND TOLERANCING PER ANSI Y14.5M-1982 UNITS ARE IN INCHES UNLESS OTHERWISE SPECIFIED.
2. USE OF SULFUR OR SILICONE BEARING OILS, LUBRICANTS, OR COOLANTS ARE STRICTLY PROHIBITED
3. USE OF RESIN OR RUBBER BONDED ADRASIVES UNDER POWER IS STRICTLY PROHIBITED. USE VITREOUS BONDED ABRASIVES ONLY.
4. CLEAN AFTER MACHINING PER VENDOR SPECIFICATION; SUBJECT TO LBNL APPROVAL.
5. VENDOR SUGGESTED CHANGES TO WELD PREPS; SUBJECT TO LBNL APPROVAL.
6. PROTECT FINISHED PART BY BAGGING OR SIMILAR METHOD TO PROTECT AND MAINTAIN CLEANLINESS DURING SHIPMENT AND STORAGE.
7. VENDOR SUGGESTED CHANGES TO TOLERANCES TO FACILITATE ASSEMBLY; SUBJECT TO LBNL APPROVAL
8. OPERATING CONDITIONS, 4.2k, 70 psig (4.4bar) TEST PRESSURE.
9. ESTIMATED WEIGHT: 768 LBS.
10. TACK WELD APPROPRIATE WELD BACKING STRIPS AROUND ENTIRE PERIMETER OF VESSEL OPENING. COVER SHOWN IN DRAWING 25M8026 WILL BE WELDED INTO OPENING DURING A LATER STEP PER DRAWING 24C3526.
11. TOOLING ITEM NOT SHOWN

ITEM	PART NO	REQD	DESCRIPTION	MATERIAL
31	251667	1	PUSH BLOCK	ALUM 6061
30	25M813	2	CLAMP COVER 1"	OFHC, C101
29	251115	2	LIQUID HELIUM TANK, END PLATE (1 PORT)	304L SS
28	-	8	SCH, M5X.8, 12LG, SILVER PLATED	SS 18-8
27	-	8	LOCK WASHER, M5	SS
26	251110	10	LIQUID HELIUM TANK, WELDMENT RING	304L SS
25	-	2	COPPER BRAID, 1" X 1/8"	-
24	251900	2	TANK SUPPORT BRACKET	SS 304L
23	251909	1	LIQUID HELIUM PORT STUB	304L SS
22	251908	1	CHECK VALVE STUB	304L SS
21	251907	1	RELIEF PORT PIPE STUB	304L SS
20	251899	2	PIPING SUPPORT PAD	SS 304L
19	251687	1	CABLE LOOM BASE-B ASSEMBLY	-
18	251457	2	HTS SOLDER ASSEMBLY-8A	-
17	251688	2	CABLE LOOM BASE ASSEMBLY	-
16	251685	2	HTS SOLDER JOINT ASSEMBLY-10	-
15	251669	2	HTS SOLDER JOINT ASSEMBLY-8	-
14	251689	3	CABLE LOOM BASE-A ASSEMBLY	-
13	251665	12	SOLDER BOX GUSSET	SS
12	25M900	2	CLAMP BASE PLATE	CDA 101
11	25M860	4	TANK SUPPORT BOSS	304L SS
10	251109	4	LIQUID HELIUM TANK, HALF RIB, LOWER	304L SS
9	251108	4	LIQUID HELIUM TANK , UPPER HALF RIB	SS 304L
8	251107	5	LIQUID HELIUM TANK, FULL RIB	SS 304L
7	251105	1	LIQUID HELIUM TANK, UPPER SHELL	304L SS
6	251104	1	LIQUID HELIUM TANK, PORT FRAME	SS 304L
5	251103	1	LIQUID HELIUM TANK, HORIZONTAL LOWER RIB	SS 304L
4	251102	1	LIQUID HELIUM TANK, , HORIZONTAL UPPER RIB	SS 304L
2	251898	4	LIFTING PAD	SS 304L
1	251106	1	LIQUID HELIUM TANK, LOWER SHELL,	304L SS

REV	DWG	CHK	ZONE	DATE	CHANGES
C	RLM	JPZ		6/9/03	Ø.485 WAS Ø.640; CORRECTED VIEWS
B	MJK	DPO		10-8-02	UPDATED VIEWS AND GEOMETRY
A	RLM	DPO		10-4-02	INITIAL RELEASE
1	RLM	SPV		8-26-02	GENERAL PRESSURE VESSEL COMPLIANCE CHANGES

THIRD ANGLE PROJECTION

UNLESS OTHERWISE SPECIFIED
TOLERANCES
X.X ± 0.1 FRAC. ± 1/64
X.XX ± 0.03 Angles ± 1.00°
X.XXX ± 0.010 FINISH 125 √ μin
DO NOT SCALE PRINT
THREADS ARE CLASS 2
CHAMFER ENDS OF ALL SCREW THREADS 30°
CUT ROUND, 1.5 THREAD RELIEF ON MACHINED THREADS
BREAK EDGES .016 MAX. ON MACHINED WORK
REMOVE BURRS, WELD SPLATTER & LOOSE SCALE
IN ACCORDANCE WITH ASME Y14.5M & B46.1

SHOP ORDERS
ACCT NO. / NO. REQD / DATE
DEL TO / DATE REQD
SURFACE TREATMT.
IDENT METHOD
PROJECT NUMBER N/A
PROJECT NAME N/A
DWG BY: KNOLLS DATE 18-Jan-02
CHK BY: Jon Zbasnik DATE 04-APR-02
APR BY: Jon Zbasnik DATE 04-APR-02

ERNEST ORLANDO LAWRENCE BERKELEY NATIONAL LABORATORY
UNIVERSITY OF CALIFORNIA - BERKELEY

LHC IR FEEDBOX
CRYOGENICS
LIQUID HELIUM TANK - 10 PORT

MICROFILMED: | DWG. TYPE: ASSEM | SHOWN ON | SCALE: 1/4 | DO NOT SCALE PRINTS
PATENT CLEAR: | DESIGN ACCT. NO.: Z5LCE2 | CATEGORY CODE: LH2003 | SHEET 1 OF 4
DWG. NO.: 25I1116 | SIZE: C | REV.:

DWG. NO. 25I1116 C 1

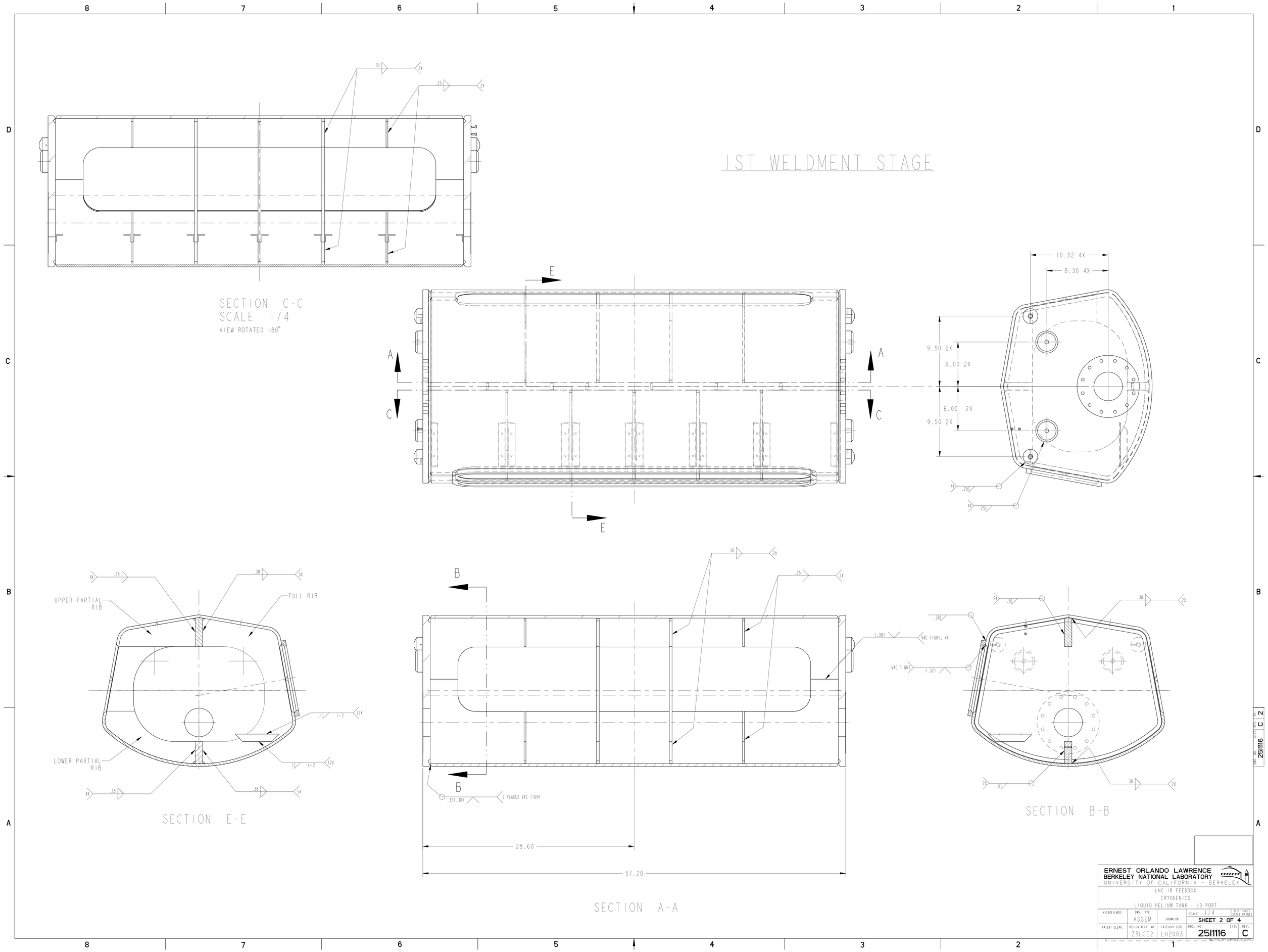
1ST WELDMENT STAGE
SECTION C-C
SCALE 1/4
VIEW ROTATED 180°
SECTION E-E
UPPER PARTIAL RIB
FULL RIB
LOWER PARTIAL RIB
SECTION A-A
2 PLACES VAC TIGHT
28.60
57.20
SECTION B-B
VAC TIGHT, 4X
VAC TIGHT
10.52 4X
8.30 4X
9.50 2X
6.00 2X
6.00 2X
9.50 2X
ERNEST ORLANDO LAWRENCE
BERKELEY NATIONAL LABORATORY
UNIVERSITY OF CALIFORNIA - BERKELEY
LHC IR FEEDBOX
CRYOGENICS
LIQUID HELIUM TANK - 10 PORT
MICROFILMED:
DWG. TYPE
ASSEM
SHOWN ON
SCALE: 1/4
DO NOT SCALE PRINTS
SHEET 2 OF 4
PATENT CLEAR:
DESIGN ACCT. NO.
Z5LCE2
CATEGORY CODE
LH2003
DWG. NO.
2511116
SIZE
REV.
C
DWG. NO. 2511116
SIZE C
REV. 2

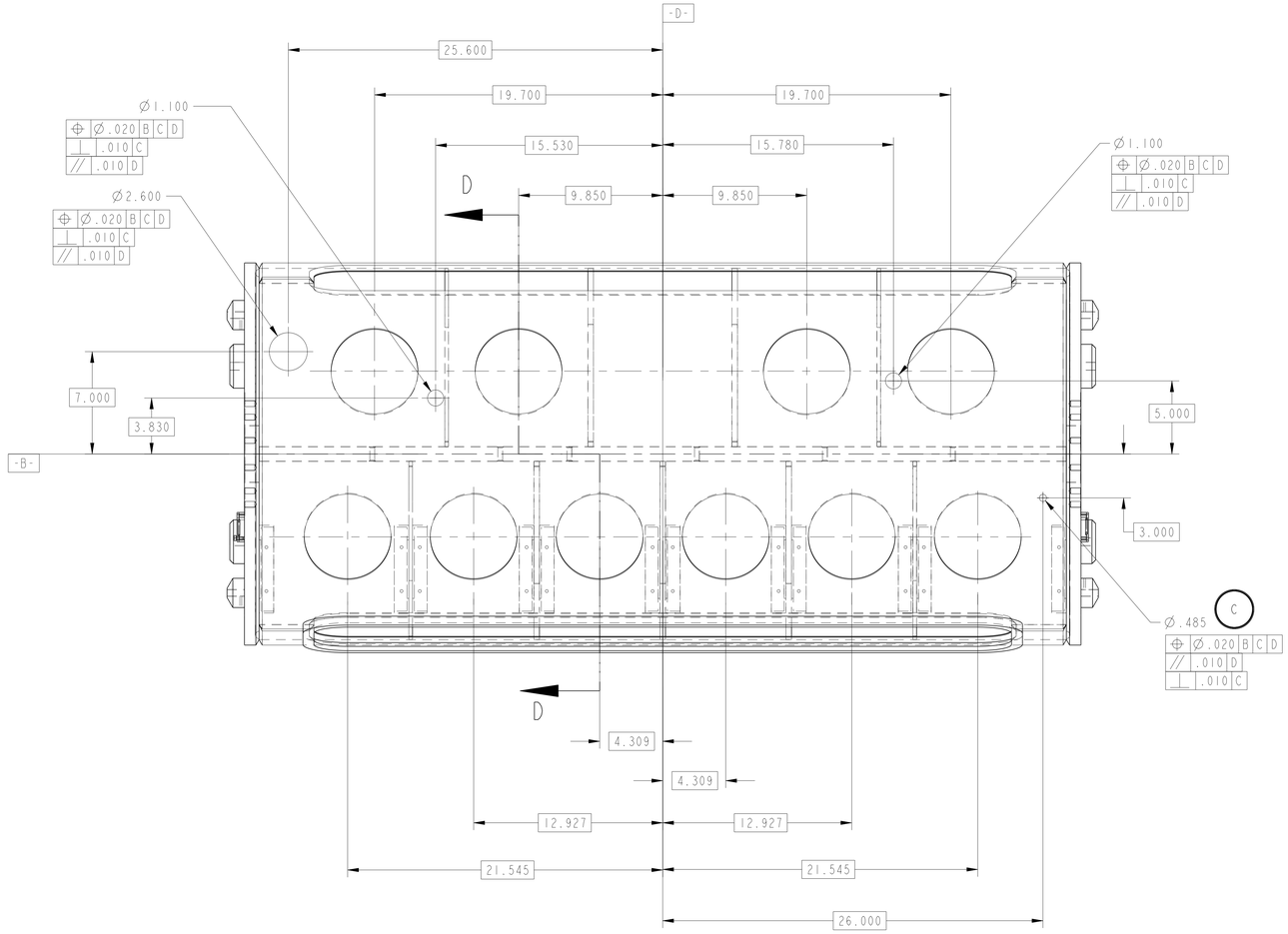

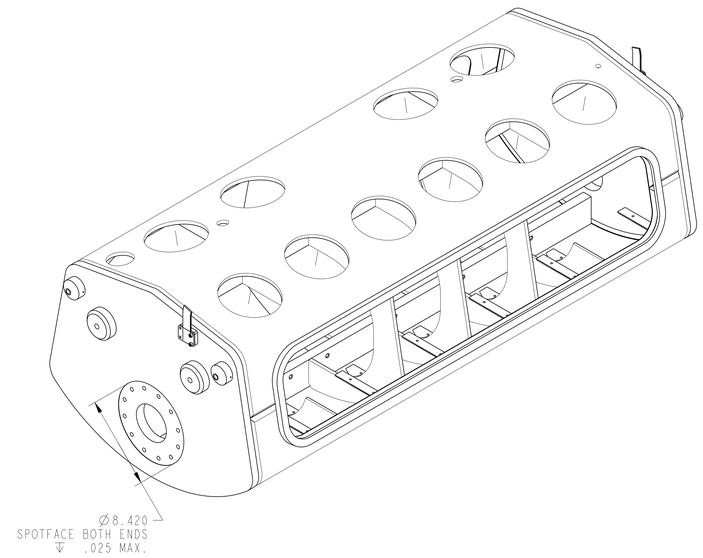

MACHINED STAGE

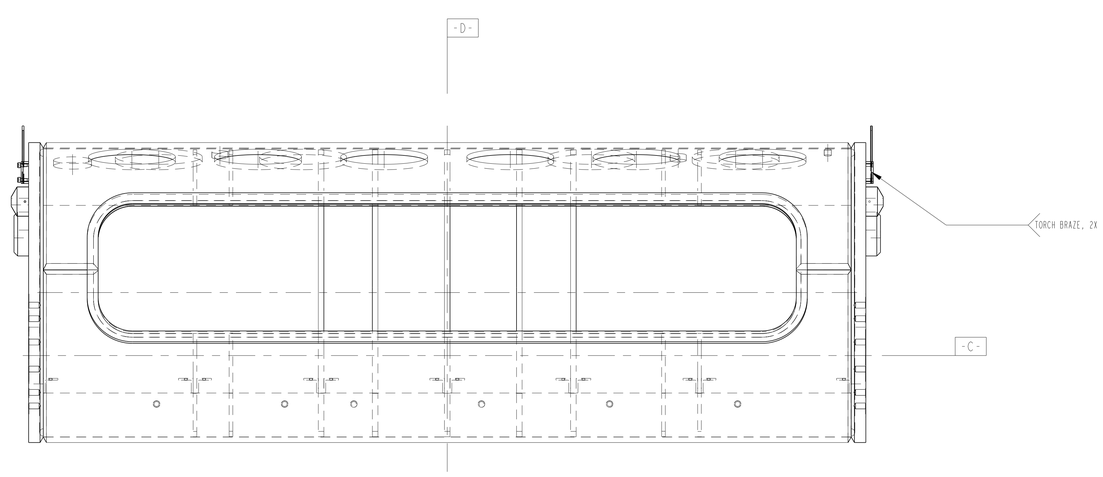

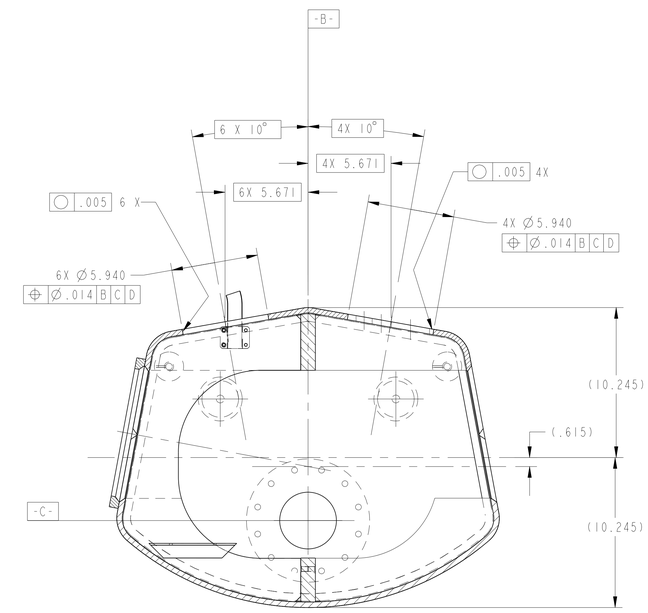

SECTION D-D

ERNEST ORLANDO LAWRENCE
BERKELEY NATIONAL LABORATORY
UNIVERSITY OF CALIFORNIA - BERKELEY

LHC IR FEEDBOX
CRYOGENICS
LIQUID HELIUM TANK - 10 PORT

MICROFILMED:	DWG. TYPE: ASSEM	SHOWN ON	SCALE: 1/4	DO NOT SCALE PRINTS
			SHEET 3 OF 4	
PATENT CLEAR:	DESIGN ACCT. NO.: Z5LCE2	CATEGORY CODE: LH2003	DWG. NO.: 2511116	SIZE: C REV:

DWG. NO. 2511116 SIZE C REV 3

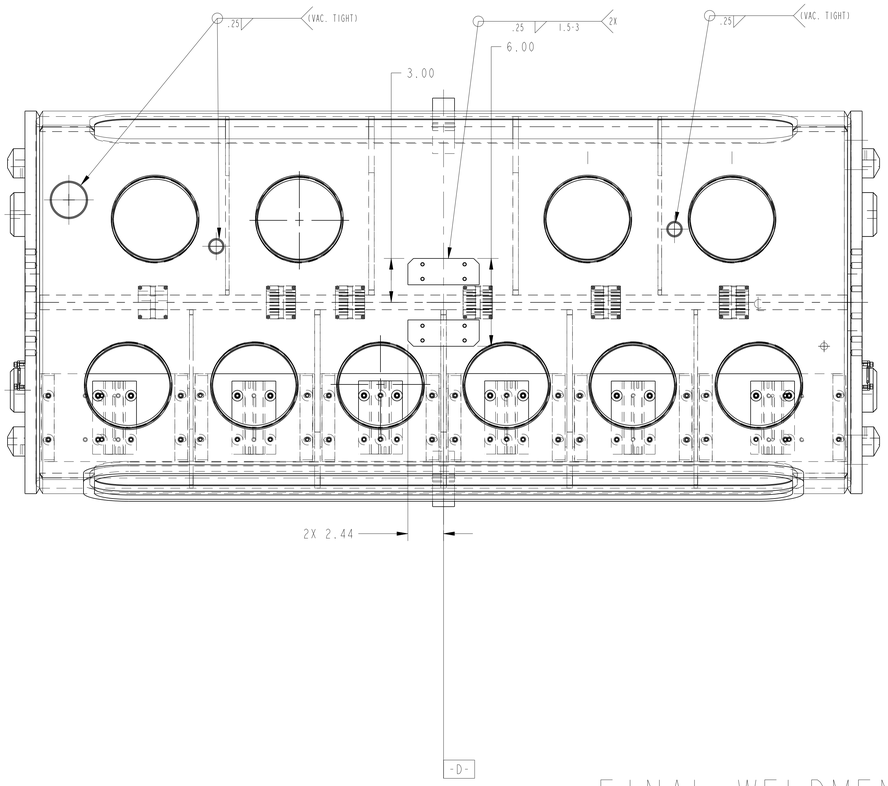

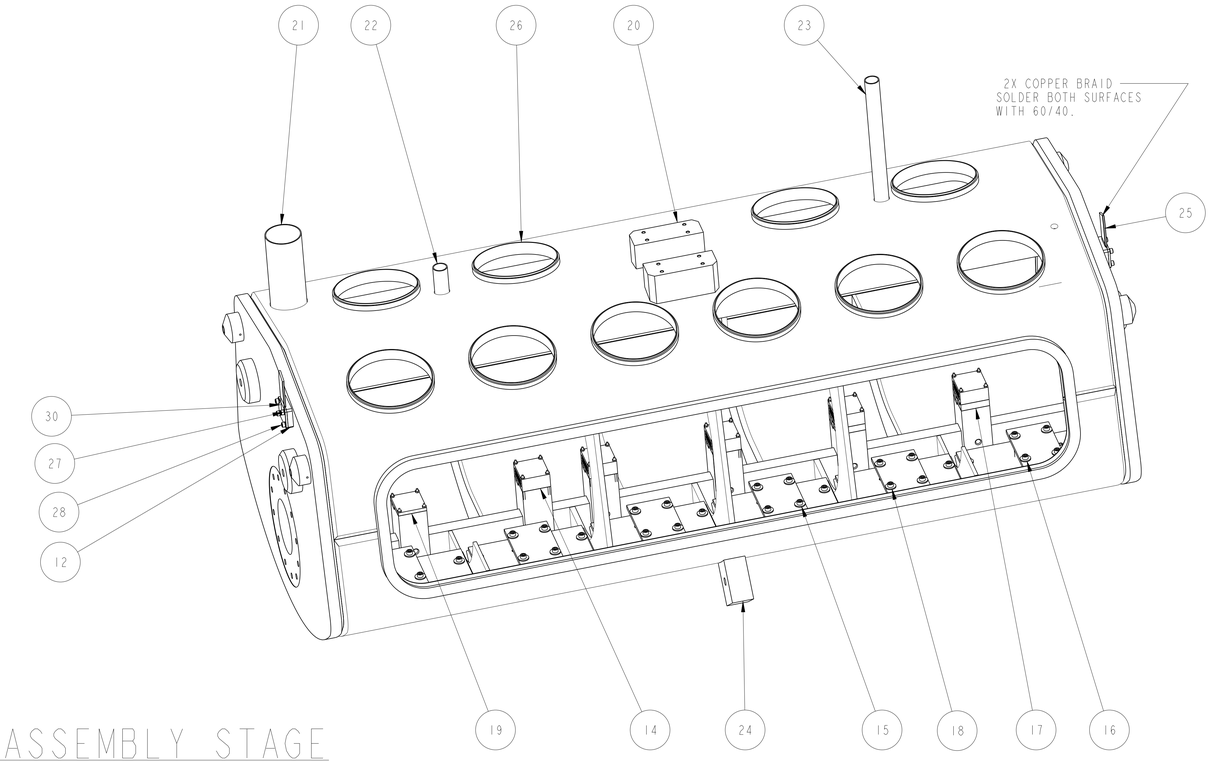

FINAL WELDMENT & ASSEMBLY STAGE

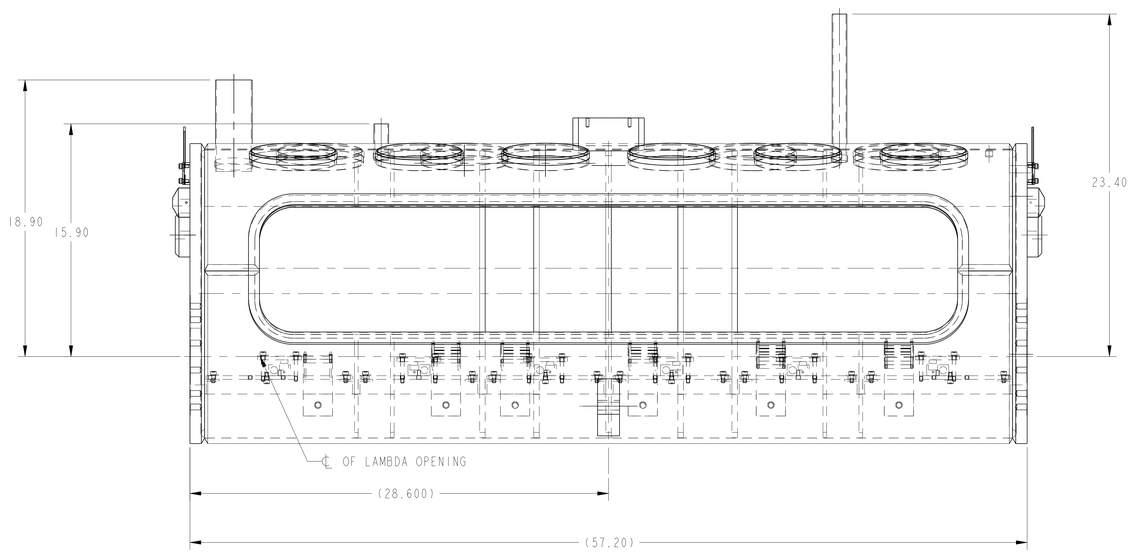

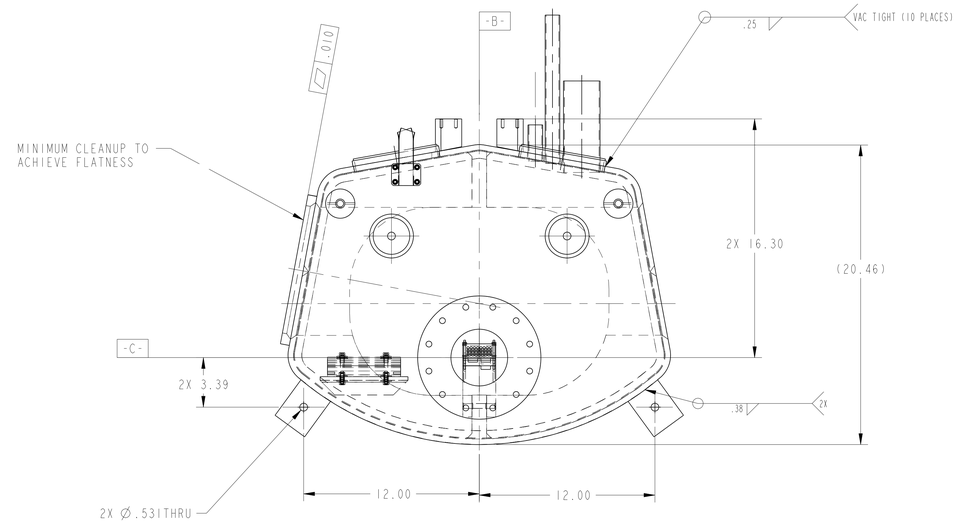

ERNEST ORLANDO LAWRENCE
BERKELEY NATIONAL LABORATORY
UNIVERSITY OF CALIFORNIA - BERKELEY

LHC IR FEEDBOX
CRYOGENICS
LIQUID HELIUM TANK - 10 PORT

MICROFILMED:	DWG. TYPE ASSEM	SHOWN ON	SCALE: 1/4	DO NOT SCALE PRINTS
			SHEET 4 OF 4	
PATENT CLEAR:	DESIGN ACCT. NO. Z5LCE2	CATEGORY CODE LH2003	DWG. NO. 2511116	SIZE C REV.

DWG. NO. 2511116 SIZE C REV. 4