| DWG. NO. | SIZE | REV. | SH. |
|---|---|---|---|
| 2510974 | | A | 1 |

| ITEM | PART NO | REQD | DESCRIPTION | MATERIAL |
|---|---|---|---|---|
| 5 | - | 12 | WASHER, M5 | SS 18-8 |
| 4 | - | 12 | SCH, M5X.8, 15LG, SILVER PLATED | SS 18-8 |
| 3 | 251385 | 2 | SUPPORT PLATE | NEMA G10 |
| 2 | 251386 | 2 | RETAINER PLATE ASSEMBLY | NEMA G10 |
| 1 | 251445 | 2 | QRL ENCLOSURE, SHORT, IP 1, 2&8 | NEMA G10 |

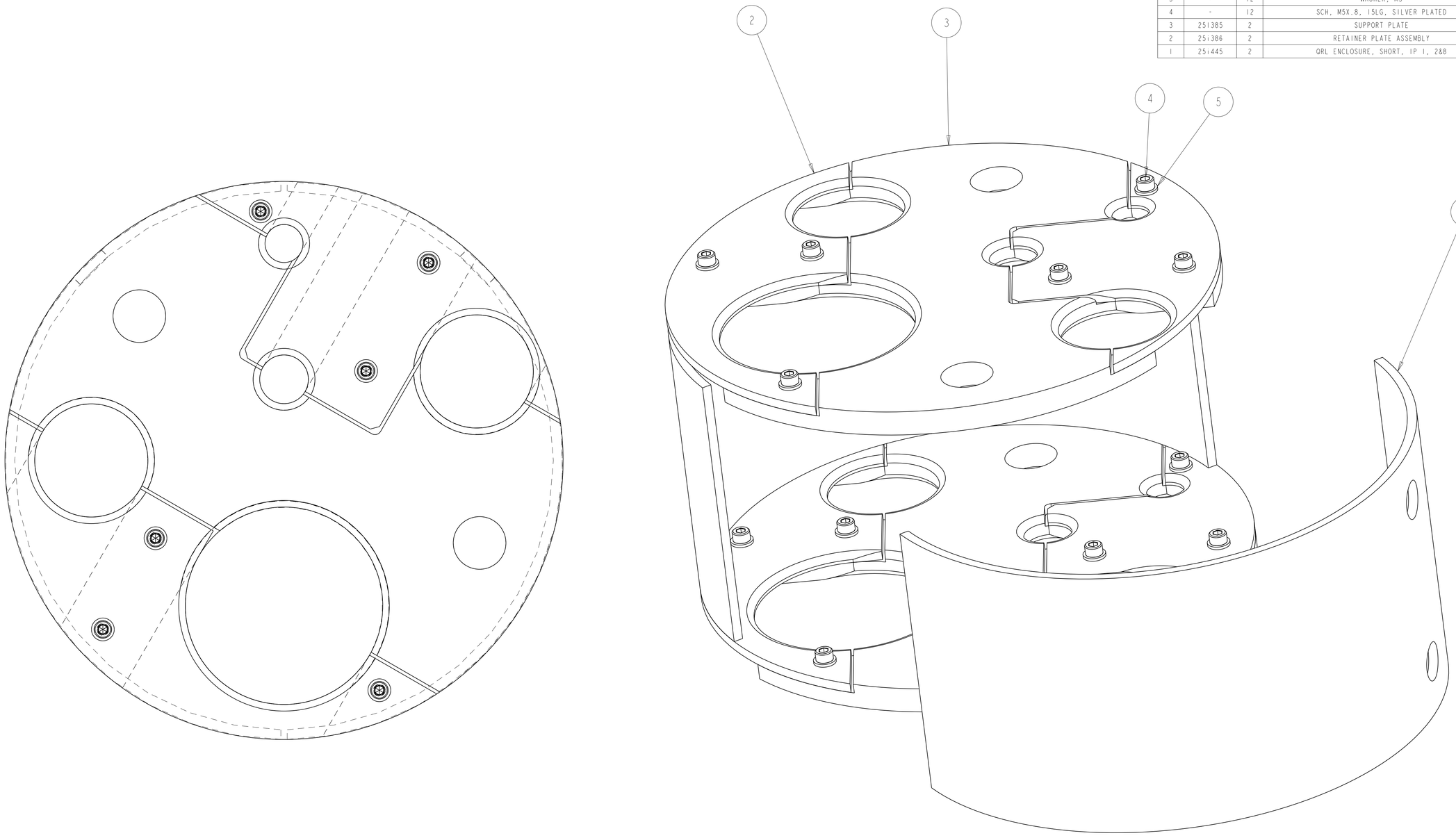


SCALE FULL

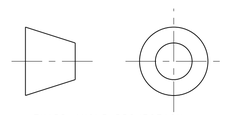

THIRD ANGLE PROJECTION

| REV | DWG | CHK | ZONE | DATE | CHANGES |
|---|---|---|---|---|---|
| A | RLM | SPV | | 11-18-02 | INITIAL RELEASE |

UNLESS OTHERWISE SPECIFIED

| TOLERANCES | | |
|---|---|---|
| | X.X ± 0.1 | FRAC. ± 1/64 |
| | X.XX ± 0.03 | Angles ± 1.00° |
| | X.XXX ± 0.010 | FINISH 125 (μin) |

DO NOT SCALE PRINT

THREADS ARE CLASS 2
CHAMFER ENDS OF ALL SCREW TREADS 30°
CUT ROUND, 1.5 THREAD RELIEF ON MACHINED THREADS
BREAK EDGES .016 MAX. ON MACHINED WORK
REMOVE BURRS, WELD SPLATTER & LOOSE SCALE
IN ACCORDANCE WITH ASME Y14.5M & B46.1

**SHOP ORDERS**

| | | | |
|---|---|---|---|
| ACCT NO. | NO. REQD | SER NO. | - |
| DEL TO | | DATE ISSD | - |
| | | DATE REQD | - |
| SURFACE TREATMT | - | | |
| IDENT METHOD | TAG | | |
| PROJECT NUMBER | N/A | | |
| PROJECT NAME | N/A | | |
| DWG BY | R LA MANTIA | DATE | 14-Nov-02 |
| CHK BY | S VIROSTEK | DATE | 18-Nov-02 |
| APR BY | D OSHATZ | DATE | 18-Nov-02 |

**ERNEST ORLANDO LAWRENCE BERKELEY NATIONAL LABORATORY**
UNIVERSITY OF CALIFORNIA - BERKELEY

LHC IR FEEDBOX
CRYOGENICS
SUPPORT, QQSC, DFBXD/DFBXH

| MICROFILMED: | DWG. TYPE | SHOWN ON | SCALE: 1.000 | DO NOT SCALE PRINTS |
|---|---|---|---|---|
| | ASSEM | 251235 | SHEET 1 OF 1 | |
| PATENT CLEAR: | DESIGN ACCT. NO. | CATEGORY CODE | DWG. NO. 2510974 | SIZE / REV. A |
| | Z5LCE3 | LH2003 | | |