DWG. NO.	SIZE	REV.	SH.
2510944		A	1

ITEM	PART NO	REQD	DESCRIPTION	MATERIAL
5	-	20	WASHER, M5	SS 18-8
4	-	20	SCH, M5X.8, 15LG, SILVER PLATED	SS 18-8
3	251379	2	SUPPORT PLATE	NEMA G10
2	251380	2	RETAINER PLATE ASSEMBLY	NEMA G10
1	251449	2	QRL ENCLOSURE, LONG, IP 1, 2&8	NEMA G10

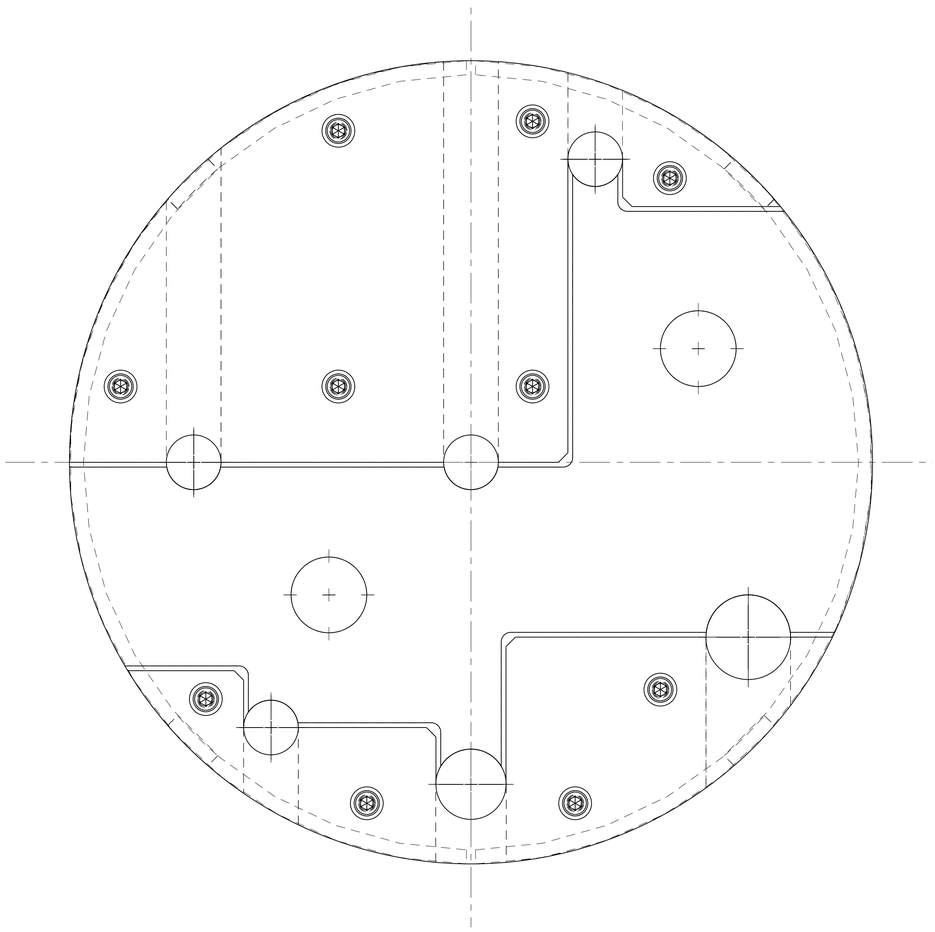

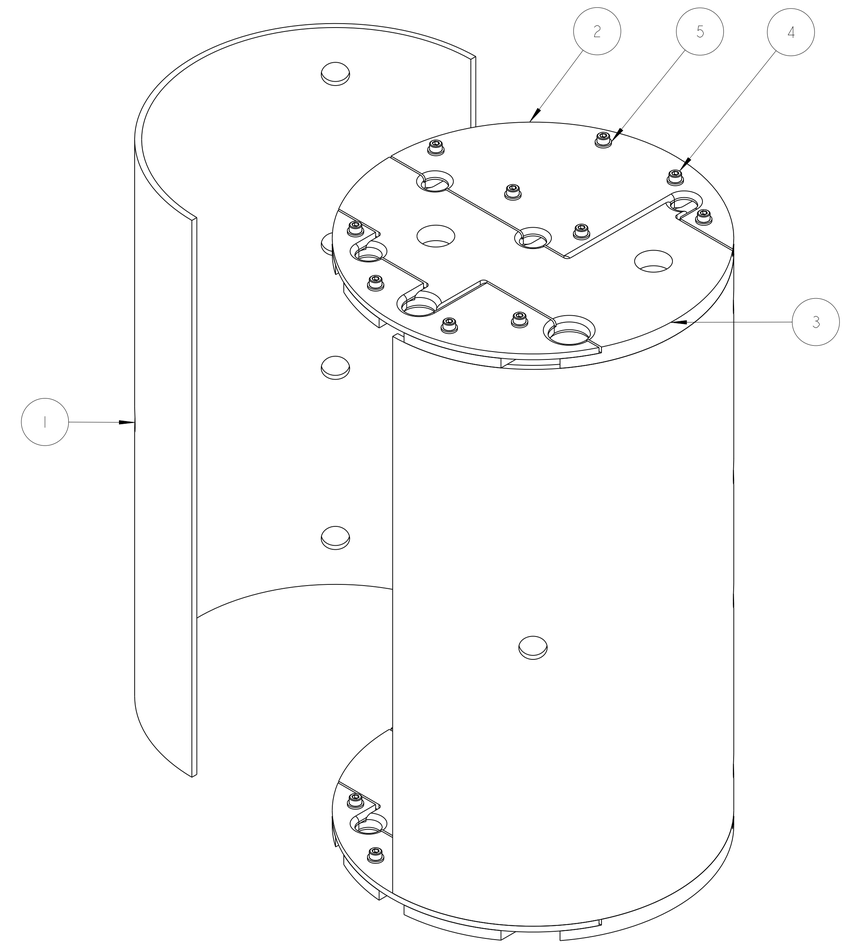

SCALE 1/2

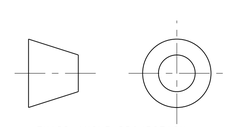

THIRD ANGLE PROJECTION

REV	DWG	CHK	ZONE	DATE	CHANGES
A	ARH	SPV		11-13-02	INITIAL RELEASE

UNLESS OTHERWISE SPECIFIED

TOLERANCES		
	X.X ± 0.1	FRAC. ± 1/64
	X.XX ± 0.03	Angles ± 1.00°
	X.XXX ± 0.010	FINISH 125/(μin)

DO NOT SCALE PRINT

THREADS ARE CLASS 2
CHAMFER ENDS OF ALL SCREW TREADS 30°
CUT ROUND, 1.5 THREAD RELIEF ON MACHINED THREADS
BREAK EDGES .016 MAX. ON MACHINED WORK
REMOVE BURRS, WELD SPLATTER & LOOSE SCALE
IN ACCORDANCE WITH ASME Y14.5M & B46.1

SHOP ORDERS

ACCT NO.	NO. REQD	SER NO.	-
		DATE ISSD	-
DEL TO		DATE REQD	-
SURFACE TREATMT	-		
IDENT METHOD	TAG		
PROJECT NUMBER	N/A		
PROJECT NAME	N/A		
DWG BY	R LA MANTIA	DATE	18-Jul-02
CHK BY	Jon Zbasnik/S.Virostek	DATE	13-Nov-02
APR BY	Jon Zbasnik/D.Oshatz	DATE	13-Nov-02

Min Flange

ERNEST ORLANDO LAWRENCE
BERKELEY NATIONAL LABORATORY
UNIVERSITY OF CALIFORNIA - BERKELEY

LHC IR FEEDBOX
CRYOGENICS
SUPPORT, QQSB, DFBXA

MICROFILMED:	DWG. TYPE	SHOWN ON	SCALE: 1/1	DO NOT SCALE PRINTS
	ASSEM	-	SHEET 1 OF 1	
PATENT CLEAR:	DESIGN ACCT. NO.	CATEGORY CODE	DWG. NO. 2510944	SIZE / REV. A
	Z5LCE2	LH2003		

Dwg. File: 2510944 Model File: 2510944