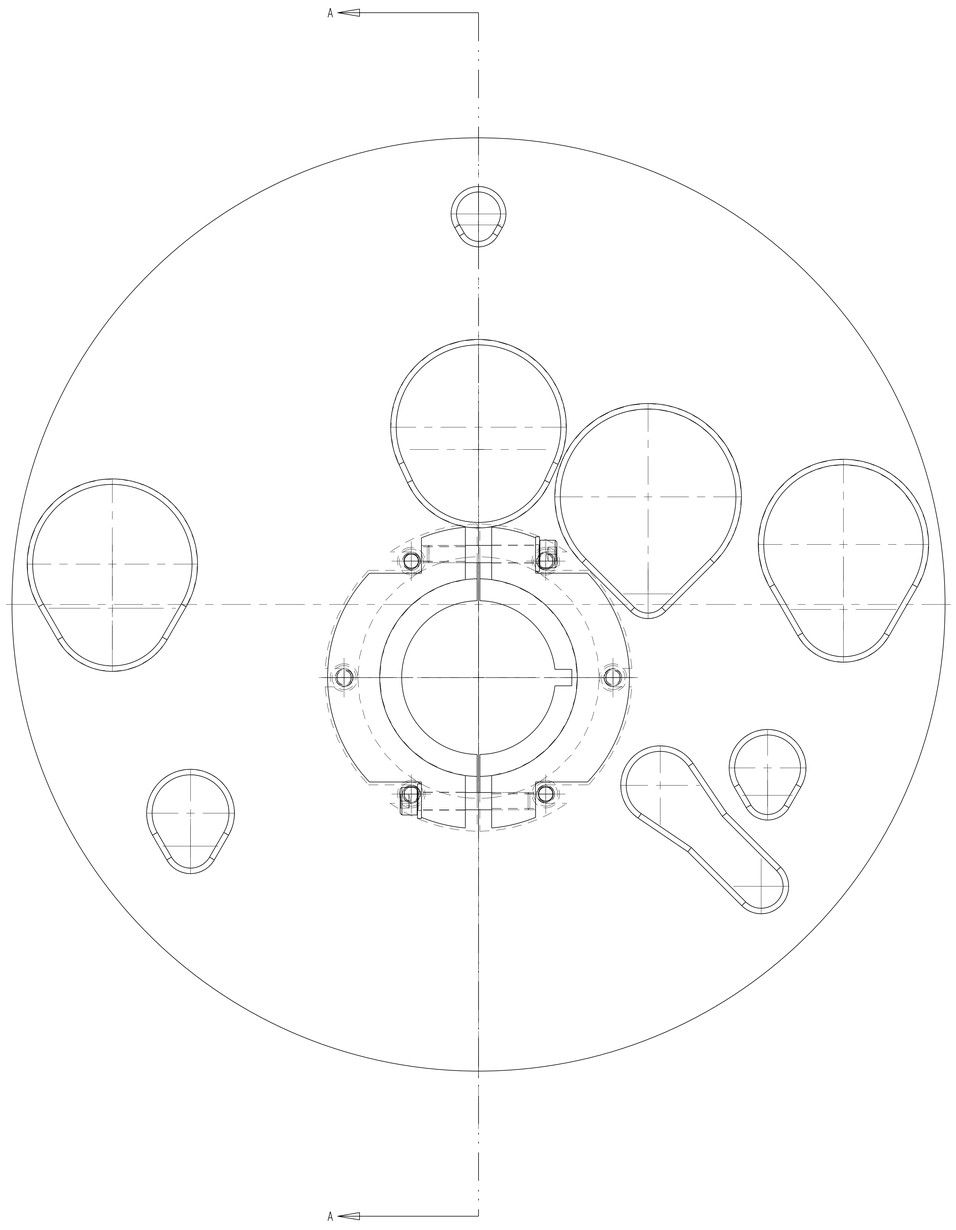

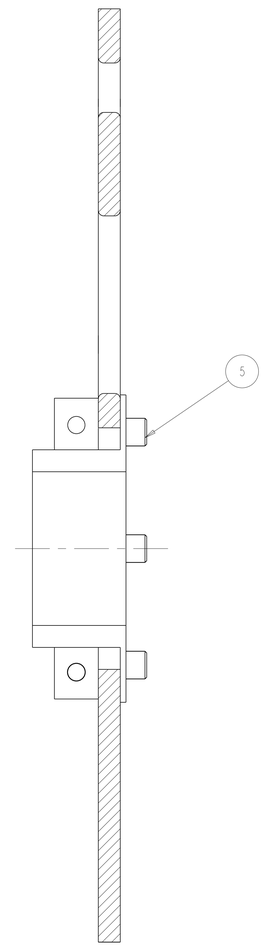

SECTION A-A

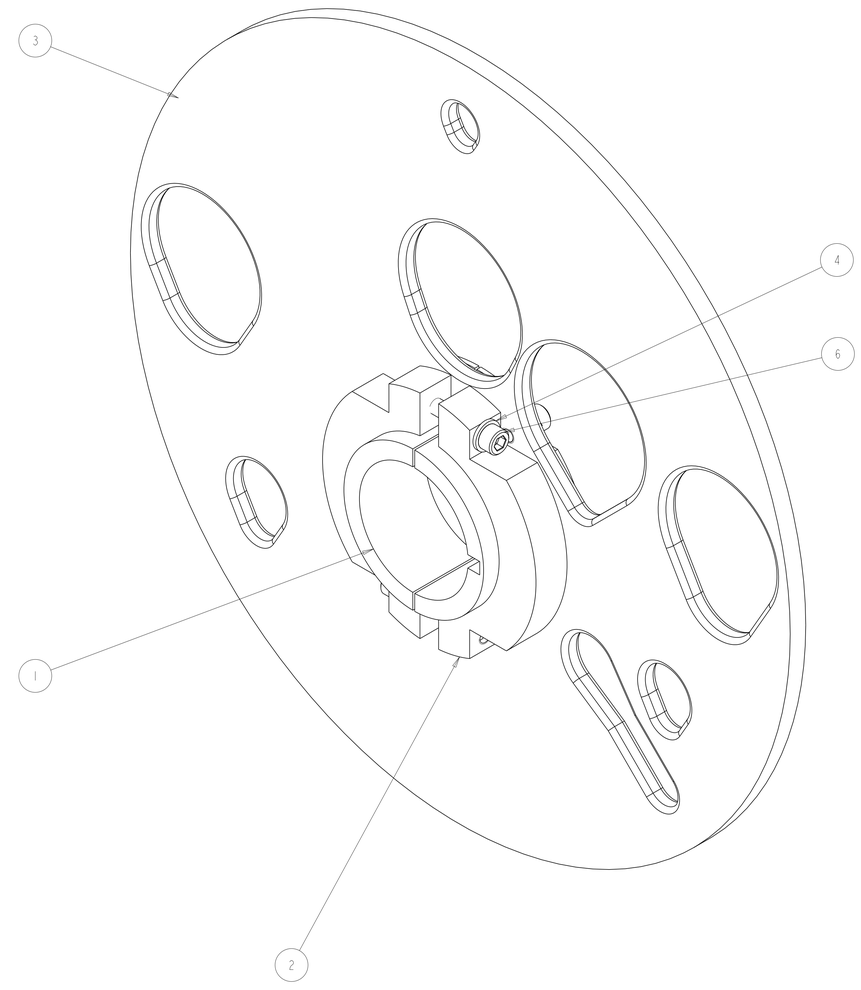

NOTES: UNLESS OTHERWISE SPECIFIED,

1. DIMENSIONS AND TOLERANCING PER ANSI Y14.5M-1982 UNITS ARE IN INCHES UNLESS OTHERWISE SPECIFIED.
2. PART IS PARALLEL TO PLANE OF REINFORCEMENT,
3. PROTECT FINISHED PART BY BAGGING OR SIMILAR METHOD TO PROTECT AND MAINTAIN CLEANLINESS DURING SHIPMENT AND STORAGE.
4. TAG WITH DRAWING NUMBER

ITEM	PART NO	DESCRIPTION	MATERIAL	REQD	DESIGNER	MAT Location
6	-	SCH, M10X1.5, 65mm LG, SILVER PLATED	SS 18-8	2		
5	-	SCH M10X1.5, 16mm LG.	SS 18-8	6	-	
4	-	WASHER, M10	SS	2		
3	-	SUPPORT PLATE	NEMA G10	1	R LA MANTIA	
2	25M801	SPLIT CLAMP	SS 304L	2	KNOLLS	
1	25M800	SPLIT HUB	SS 304L	1	KNOLLS	

THIRD ANGLE PROJECTION

REV	DWG	CHK	ZONE	DATE	CHANGES
A	MJK	DPO		9/18/02	INITIAL RELEASE

UNLESS OTHERWISE SPECIFIED
TOLERANCES: X.X ± 0.1 FRAC. ± 1/64; X.XX ± 0.02 Angles ± 1.00°; X.XXX ± 0.005 FINISH 125 μin
DO NOT SCALE PRINT
THREADS ARE CLASS 2
CHAMFER ENDS OF ALL SCREW THEADS 30°
CST ROUND, 1.5 THREAD RELIEF ON MACHINED THREADS
BREAK EDGES .015 MAX. ON MACHINED WORK
REMOVE BURRS, WELD SPLATTER & LOOSE SCALE
IN ACCORDANCE WITH ASME Y14.5M & B46.1

SHOP ORDERS
SER NO
ACCT NO | NO REQD | DATE ISSD
SEL TO | DATE REQD
SURFACE TREATMT
IDENT METHOD TAG
PROJECT NUMBER N/A
PROJECT NAME N/A
DWN BY R LA MANTIA | DATE 18-July-02
CHK BY OSHATZ | DATE 9/18/02
APR BY OSHATZ | DATE 9/18/02

ERNEST ORLANDO LAWRENCE BERKELEY NATIONAL LABORATORY
UNIVERSITY OF CALIFORNIA - BERKELEY

LHC IR FEEDBOX
CRYOGENICS
SUPPORT, LBX SIDE, DFBXC / DFBXG

MICROFILMED: | DWG. TYPE ASSEM | SHOWN ON - | SCALE: 0.750 | DO NOT SCALE PRINTS
PATENT CLEAR: | DESIGN ACCT. NO. Z5LCE2 | CATEGORY CODE LH2003 | DWG. NO. 2510776 | SIZE A | REV
SHEET 1 OF 2

DWG. NO. 2510776 SIZE A REV 1 SH 1

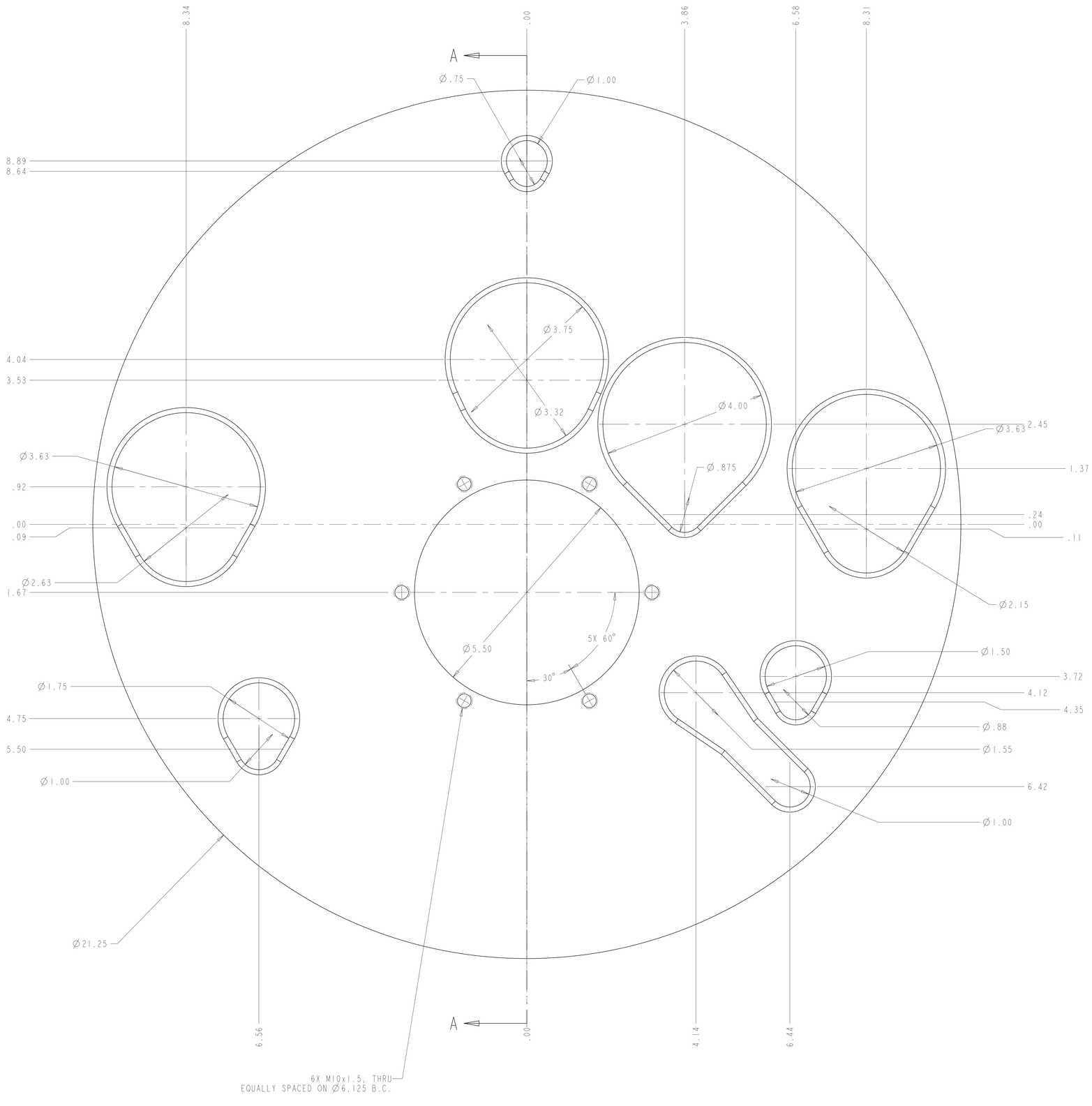

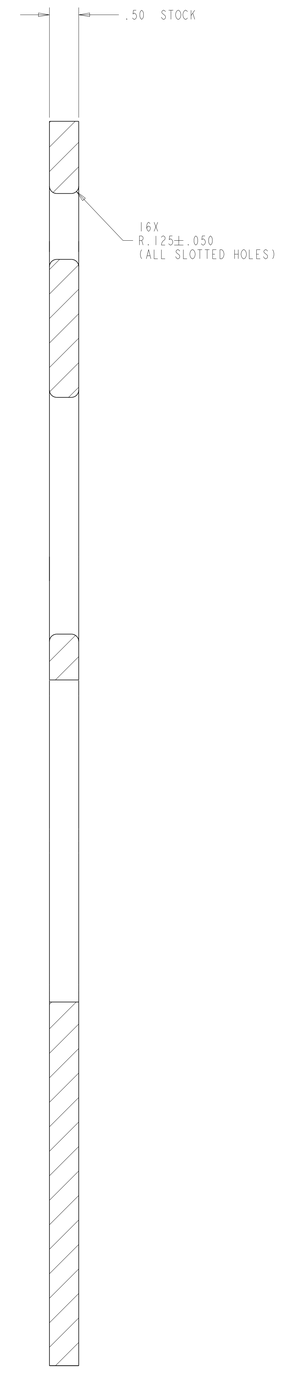

SECTION A-A

ERNEST ORLANDO LAWRENCE
BERKELEY NATIONAL LABORATORY
UNIVERSITY OF CALIFORNIA - BERKELEY

LHC IR FEEDBOX
CRYOGENICS
SUPPORT, LBX SIDE, DFBXC / DFBXG

MICROFILMED:	DWG. TYPE	SHOWN ON	SCALE: 0.500	DO NOT SCALE PRINTS
	ASSEM	-	SHEET 2 OF 2	
PATENT CLEAR:	DESIGN ACCT. NO.	CATEGORY CODE	DWG. NO.	SIZE / REV.
	Z5LCE2	LH2003	2510776	A

DWG. NO. 2510776 SIZE A REV. 2