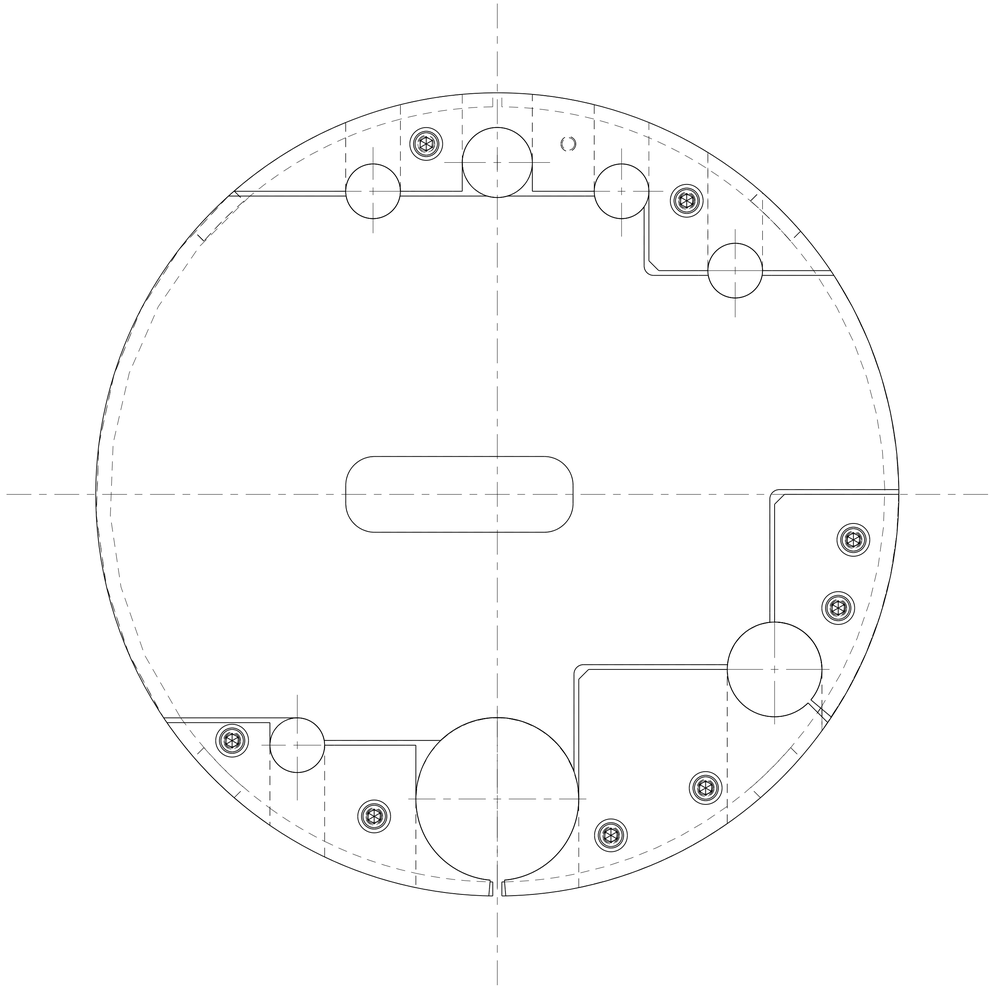

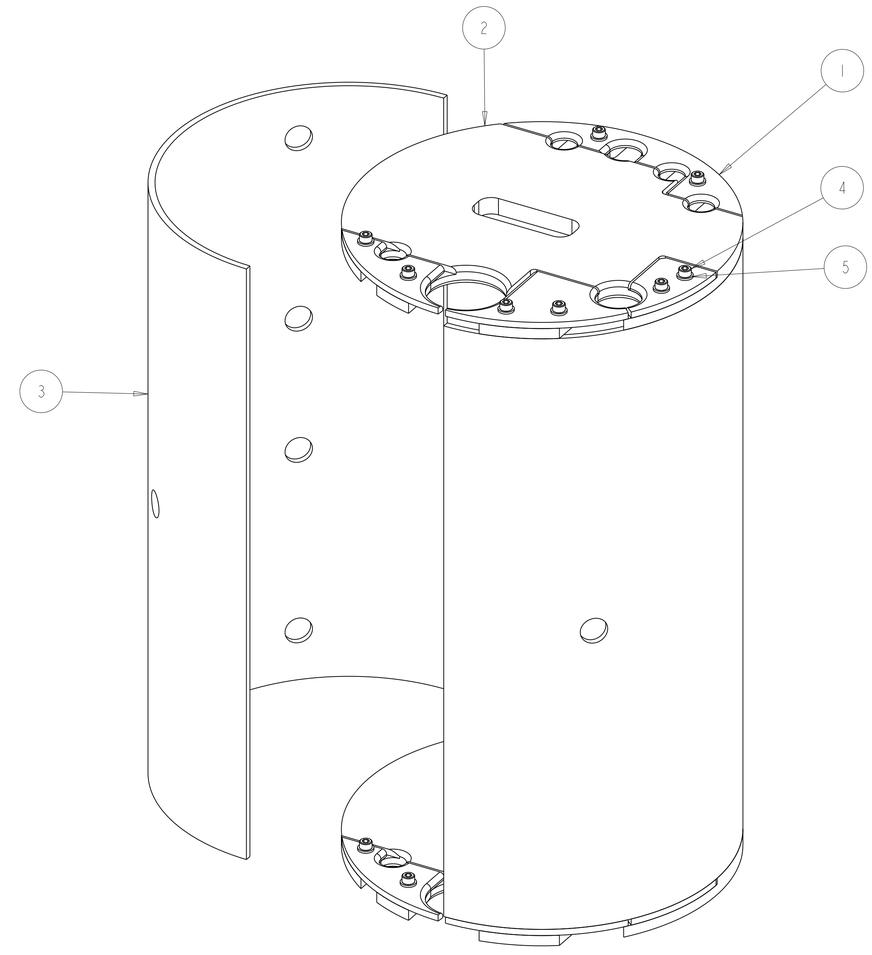

SCALE 1/2

B

ITEM	PART NO	DESCRIPTION	MATERIAL	REQD	DESIGNER	MAT Location
5	-	WASHER, M5	SS 18-8	16		
4	-	SCH, M5X.8, 15LG, SILVER PLATED	SS 18-8	16		
3	251449	QRL ENCLOSURE, LONG, IP 1, 2&8	NEMA G10	2	R LA MANTIA	
2	251374	SUPPORT PLATE	NEMA G10	2	R LA MANTIA	
1	251372	RETAINER PLATE ASSEMBLY	NEMA G10	2	R LA MANTIA	

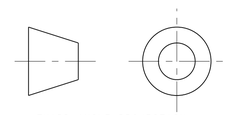

THIRD ANGLE PROJECTION

REV	DWG	CHK	ZONE	DATE	CHANGES
B	RLM	SPV		11-26-02	MATERIAL CHANGE M5 WASHER
A	RLM	DPO		10-4-02	INITIAL RELEASE

UNLESS OTHERWISE SPECIFIED

TOLERANCES		
	X.X ± 0.1	FRAC. ± 1/64
	X.XX ± 0.03	Angles ± 1.00°
	X.XXX ± 0.010	FINISH 125 √(μin)

DO NOT SCALE PRINT

THREADS ARE CLASS 2
CHAMFER ENDS OF ALL SCREW TREADS 30°
CUT ROUND, 1.5 THREAD RELIEF ON MACHINED THREADS
BREAK EDGES .016 MAX. ON MACHINED WORK
REMOVE BURRS, WELD SPLATTER & LOOSE SCALE
IN ACCORDANCE WITH ASME Y14.5M & B46.1

SHOP ORDERS

ACCT NO.	NO. REQD	SER NO.	-
DEL TO		DATE ISSD	-
SURFACE TREATMT	-	DATE REQD	-
IDENT METHOD	TAG		
PROJECT NUMBER	N/A		
PROJECT NAME	N/A		
DWG BY	R LA MANTIA	DATE	18-July-02
CHK BY	D OSHATZ	DATE	19-Sep-02
APR BY	D OSHATZ	DATE	19-Sep-02

ERNEST ORLANDO LAWRENCE
BERKELEY NATIONAL LABORATORY
UNIVERSITY OF CALIFORNIA - BERKELEY

LHC IR FEEDBOX
CRYOGENICS
SUPPORT, QQSD, DFBXC/DFBXG

MICROFILMED:	DWG. TYPE	SHOWN ON	SCALE: 1/1	DO NOT SCALE PRINTS
	ASSEM	-	SHEET 1 OF 1	
PATENT CLEAR:	DESIGN ACCT. NO.	CATEGORY CODE	DWG. NO.	SIZE / REV.
	Z5LCE2	LH2003	2510754	B

Dwg. File: 251075_Model File: 251075