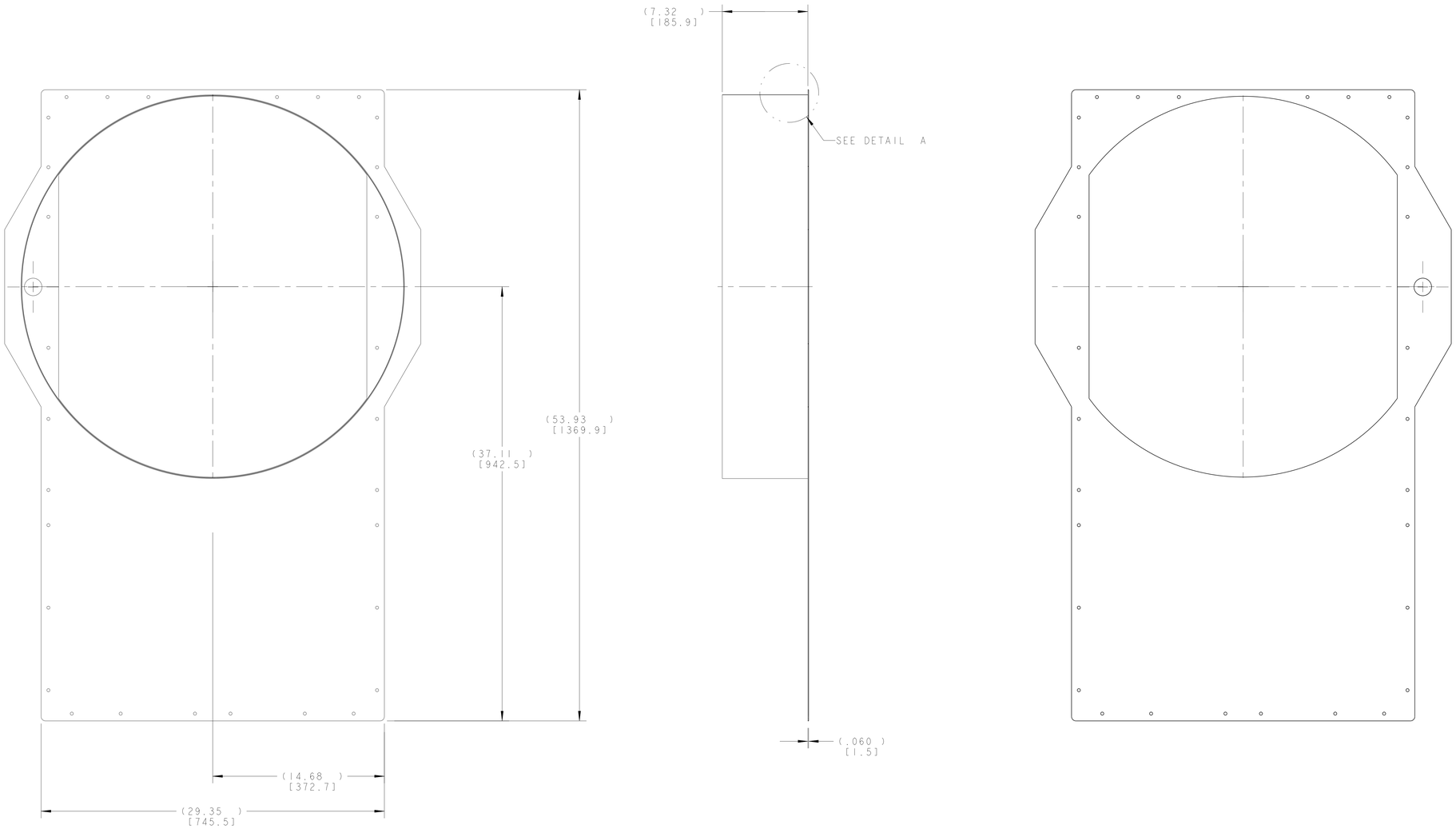

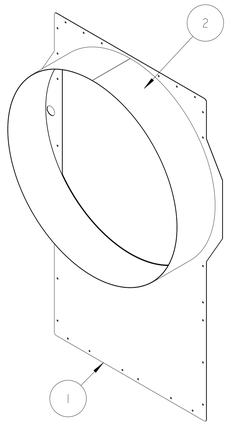

SCALE 1/8

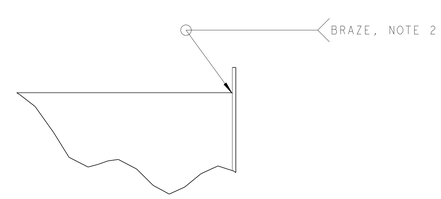

DETAIL A
SCALE 1/1

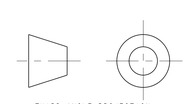

THIRD ANGLE PROJECTION

NOTES: (UNLESS OTHERWISE SPECIFIED)

1. THIS IS A CRYOGENIC VACUUM COMPONENT.
2. WELDING PROCEDURE: PER VENDOR SPECIFICATION WITH LBNL APPROVAL.
3. CLEANING PROCEDURE : PER VENDOR SPECIFICATION WITH LBNL APPROVAL.
4. PACKAGING AND STORAGE PROCEDURE OF THE COMPONENTS: PER VENDOR SPECIFICATION WITH LBNL APPROVAL.
5. DIMENSIONS AND TOLERANCING PER ANSI Y14.5M-1982. UNITS ARE IN INCHES [mm] UNLESS OTHERWISE SPECIFIED.
6. USE OF SULFUR OR SILICONE BEARING OILS, LUBRICANTS, OR COOLANTS ARE STRICTLY PROHIBITED.
7. USE OF RESIN OR RUBBER BONDED ABRASIVES UNDER POWER IS STRICTLY PROHIBITED. USE VITREOUS BONDED ABRASIVES ONLY.
8. TIN NOTED AREAS WITH 60/40 Sn/Pb SOLDER, USE RESIN FLUX.

ITEM	PART NO	REQD	DESCRIPTION	MATERIAL
2	-	1	SHEET, 1/16" THK.	COPPER, OFHC, C101
1	-	1	SHEET, 1/16" THK.	COPPER, OFHC, C101

REV	DWG	CHK	ZONE	DATE	CHANGES
C	RLM	JPZ		10/16/03	15.355 WAS 15.339
B	ARH	DPO		03/05/03	MINOR COSMETIC DRAWING CHANGES
A	ARH	DPO		09-12-02	INITIAL RELEASE

UNLESS OTHERWISE SPECIFIED
TOLERANCES: X.X ± 0.1 FRAC. ± 1/64; X.XX ± 0.03 Angles ± 1.00°; X.XXX ± 0.010 FINISH 125/1000
DO NOT SCALE PRINT
THREADS ARE CLASS 2
CHAMFER ENDS OF ALL SCREW TREADS 30°
CUT ROUND, 1.5 THREAD RELIEF ON MACHINED THREADS
BREAK EDGES .016 MAX. ON MACHINED WORK
REMOVE BURRS, WELD SPLATTER & LOOSE SCALE
IN ACCORDANCE WITH ASME Y14.5M & B46.1

SHOP ORDERS
ACCT NO. | NO. REQD | SER NO. - | DATE ISSD - | DEL TO | DATE REQD -
SURFACE TREATMT -
IDENT METHOD TAG
PROJECT NUMBER N/A
PROJECT NAME N/A
DWG BY KNOLLS DATE 19-Oct-01
CHK BY Jon Zbasnik DATE 16-AUG-02
APR BY Jon Zbasnik DATE 16-AUG-02

ERNEST ORLANDO LAWRENCE BERKELEY NATIONAL LABORATORY
UNIVERSITY OF CALIFORNIA - BERKELEY
LHC IR FEEDBOX
CRYOGENICS
THERMAL SHIELD, SIDE LOX

MICROFILMED: | DWG. TYPE ASSEM | SHOWN ON 251079 | SCALE: 1/4 | DO NOT SCALE PRINTS
PATENT CLEAR: | DESIGN ACCT. NO. Z5LCE2 | CATEGORY CODE LH2003 | DWG. NO. 2510736 | SIZE C | REV. C
SHEET 1 OF 3

DWG. NO. 2510736 SIZE C REV. 1 SH. 1

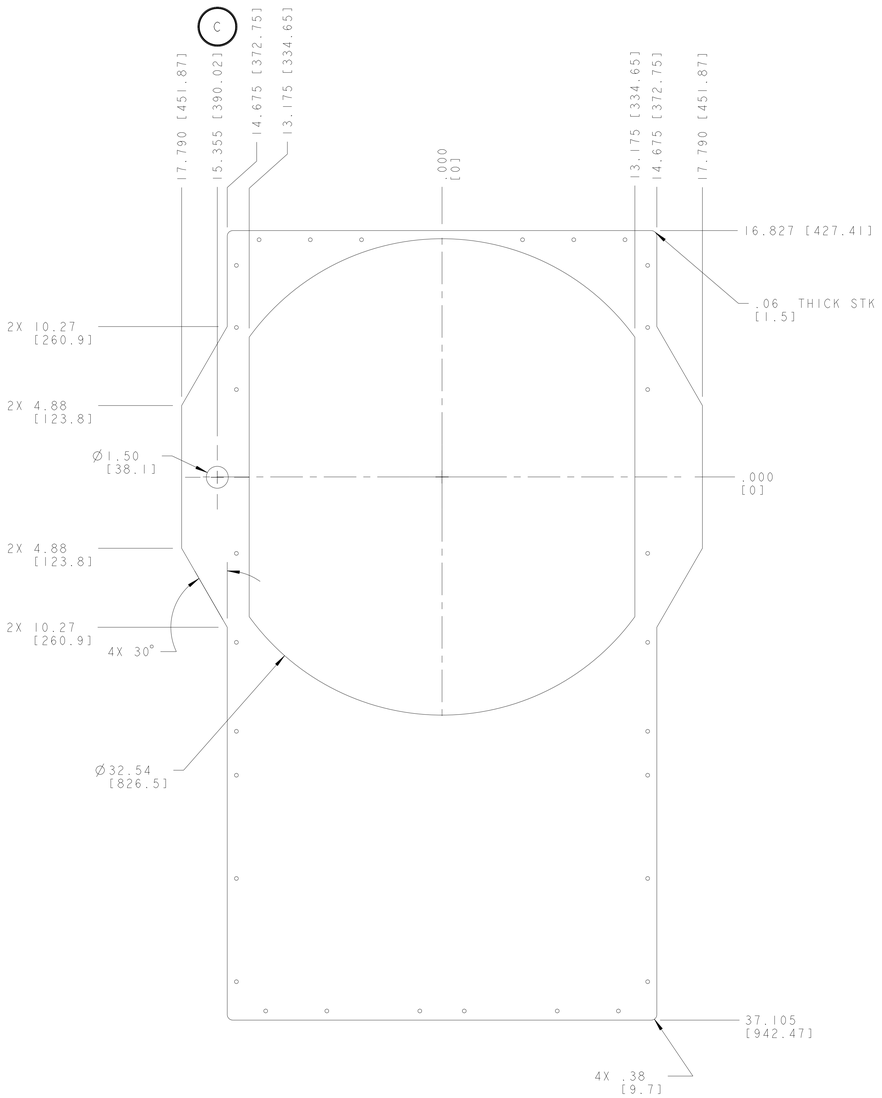

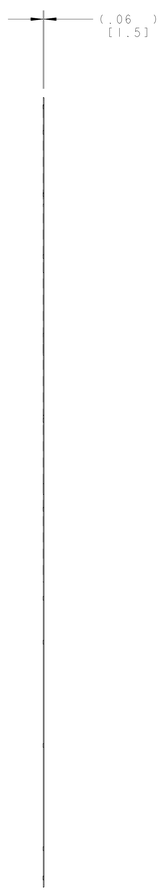

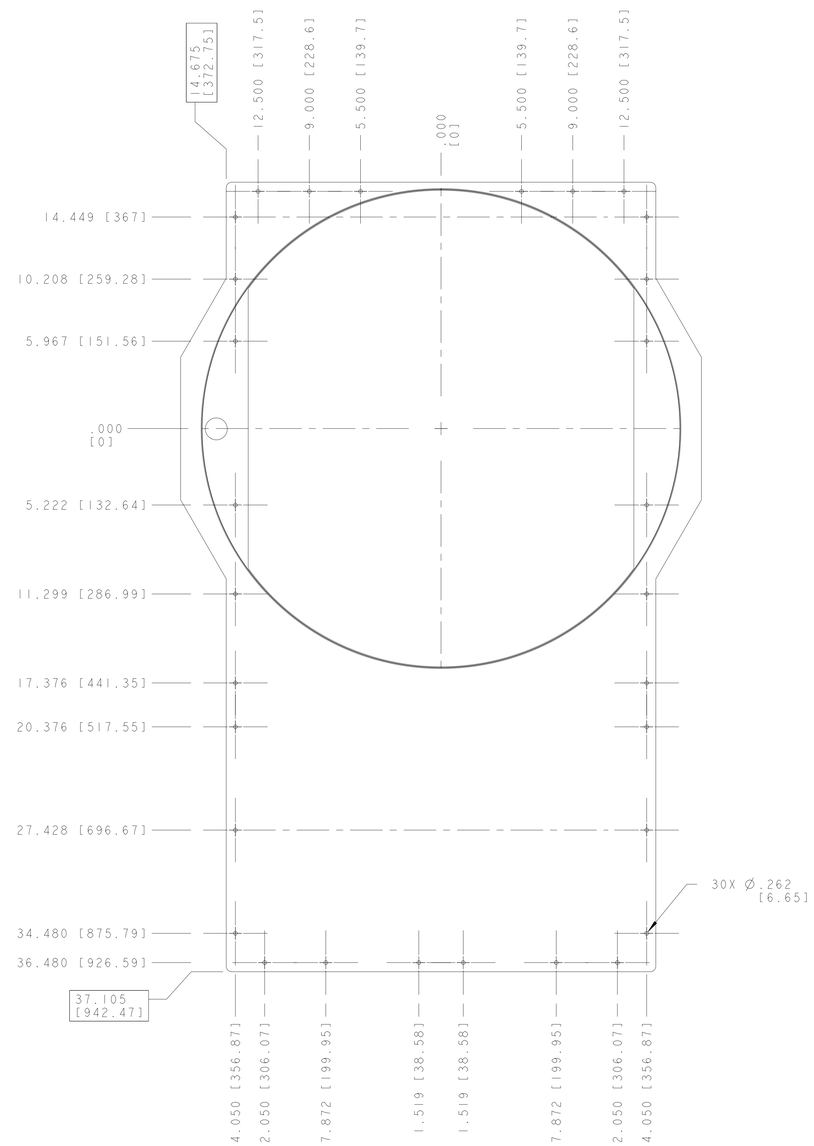

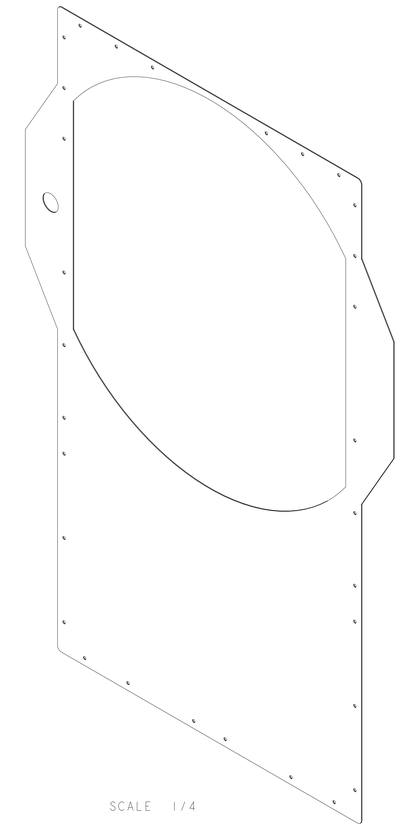

SCALE 1/4

ERNEST ORLANDO LAWRENCE
BERKELEY NATIONAL LABORATORY
UNIVERSITY OF CALIFORNIA · BERKELEY

LHC IR FEEDBOX
CRYOGENICS
THERMAL SHIELD, SIDE LOX

MICROFILMED:	DWG. TYPE	SHOWN ON	SCALE: 1/4	DO NOT SCALE PRINTS
	ASSEM	251079	SHEET 2 OF 3	
PATENT CLEAR:	DESIGN ACCT. NO.	CATEGORY CODE	DWG. NO.	SIZE / REV.
	Z5LCE2	LH2003	2510736	C

DWG. NO. 2510736 SIZE C REV. SHT. 2

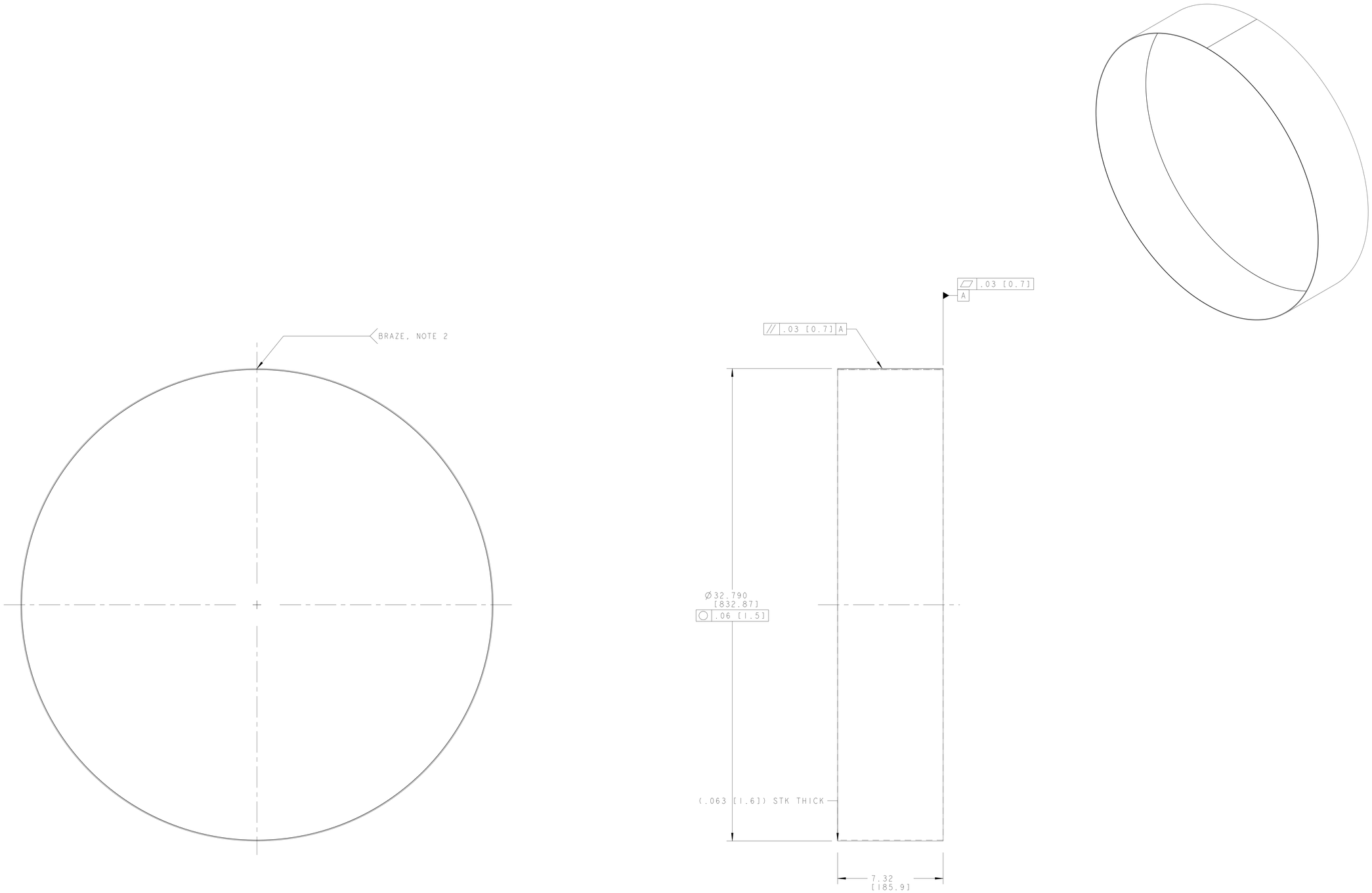

ERNEST ORLANDO LAWRENCE
BERKELEY NATIONAL LABORATORY
UNIVERSITY OF CALIFORNIA - BERKELEY

LHC IR FEEDBOX
CRYOGENICS
THERMAL SHIELD, SIDE LOX

MICROFILMED:	DWG. TYPE	SHOWN ON	SCALE: 1/4	DO NOT SCALE PRINTS
	ASSEM	251079	SHEET 3 OF 3	
PATENT CLEAR:	DESIGN ACCT. NO.	CATEGORY CODE	DWG. NO.	SIZE / REV.
	Z5LCE2	LH2003	2510736	C

DWG. NO. 2510736 SIZE C REV. 3