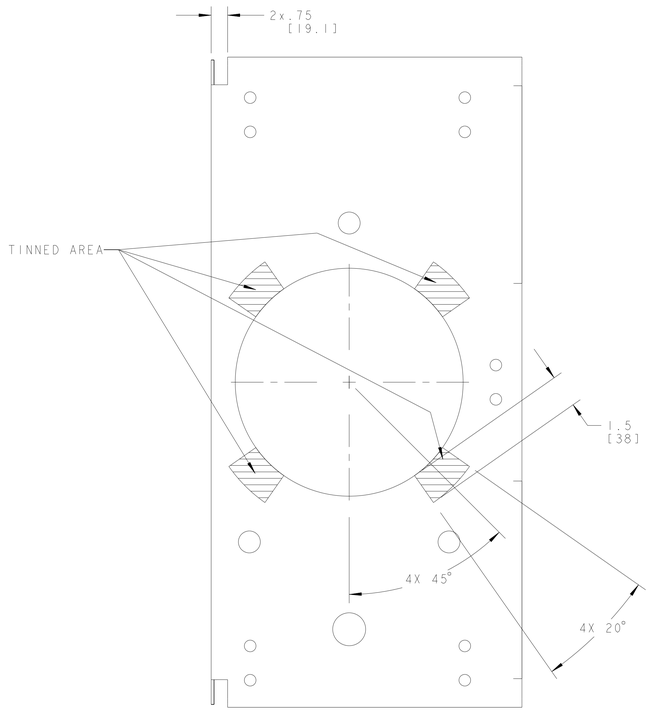

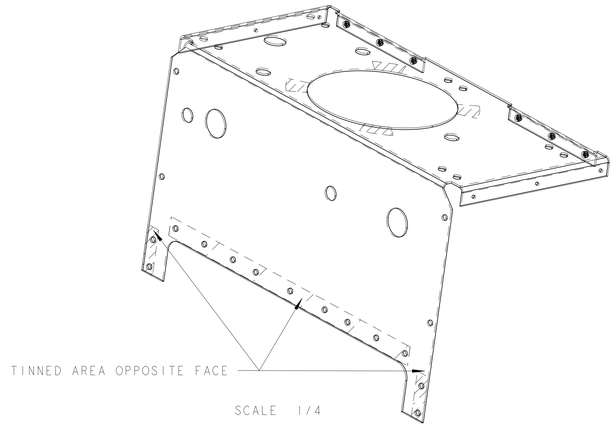

SCALE 1/4

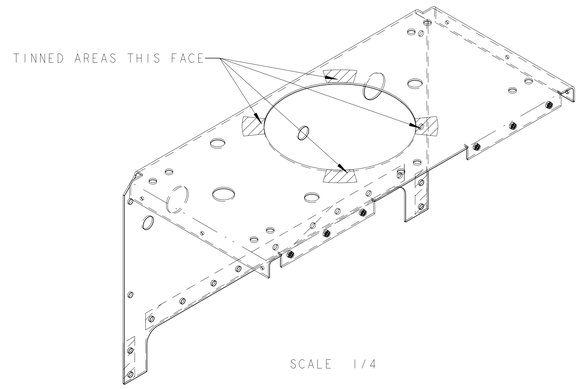

SCALE 1/4

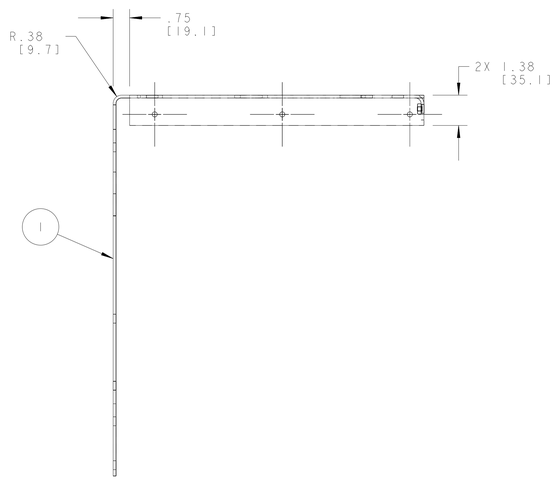

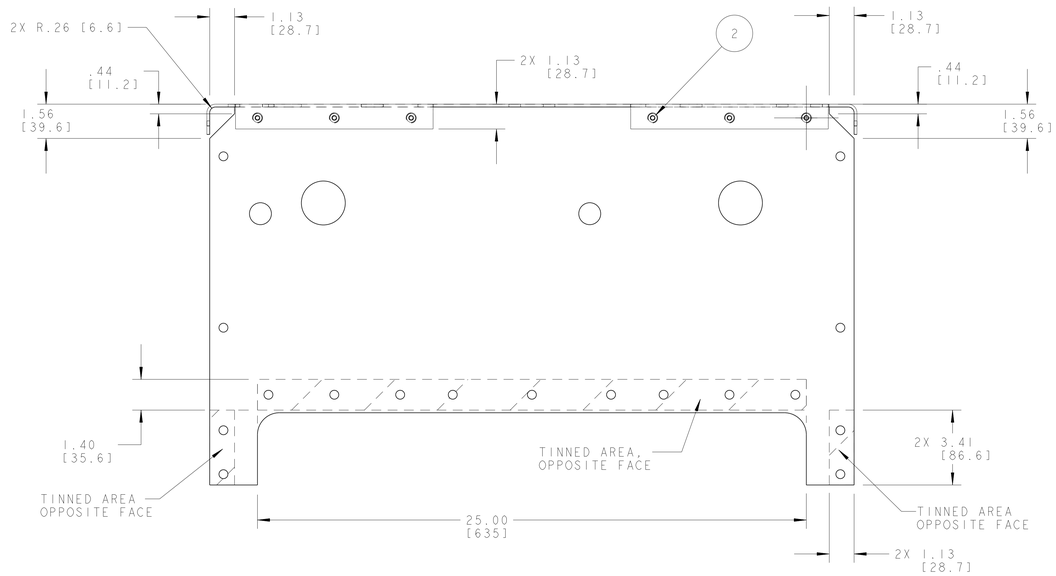

NOTES: (UNLESS OTHERWISE SPECIFIED)

1. THIS IS A CRYOGENIC VACUUM COMPONENT.
2. WELDING PROCEDURE: PER VENDOR SPECIFICATION WITH LBNL APPROVAL.
3. CLEANING PROCEDURE : PER VENDOR SPECIFICATION WITH LBNL APPROVAL.
4. PACKAGING AND STORAGE PROCEDURE OF THE COMPONENTS: PER VENDOR SPECIFICATION WITH LBNL APPROVAL.
5. DIMENSIONS AND TOLERANCING PER ANSI Y14.5M-1982. UNITS ARE IN INCHES [mm] UNLESS OTHERWISE SPECIFIED.
6. USE OF SULFUR OR SILICONE BEARING OILS, LUBRICANTS, OR COOLANTS ARE STRICTLY PROHIBITED.
7. USE OF RESIN OR RUBBER BONDED ABRASIVES UNDER POWER IS STRICTLY PROHIBITED. USE VITREOUS BONDED ABRASIVES ONLY.
8. TIN NOTED AREAS WITH 60/40 Sn/Pb SOLDER, USE RESIN FLUX.

THIRD ANGLE PROJECTION

REV	DWG	CHK	ZONE	DATE	CHANGES
C	RLM	JPZ		10/16/03	ADDED MISSING LEG DIMENSION 14.156 ADD DIM 5.27; ADD Ø1.500 HOLE LOCATION; ADD Ø.531 HOLE LOCATIONS CLARIFY 4.55 / 4.51 HOLE DIMENSIONS REMOVE BASIC DIM BOXES 14.805 AND 6.287
B	JDR	DPO		11-08-02	ADDED XB THRUST PLATE HOLES
A	ARH	DPO		09-09-02	INITIAL RELEASE

UNLESS OTHERWISE SPECIFIED
TOLERANCES
X.X ± 0.1 FRAC. ± 1/64
X.XX ± 0.03 Angles ± 1.00°
X.XXX ± 0.010 FINISH 125 μin
DO NOT SCALE PRINT
THREADS ARE CLASS 2
CHAMFER ENDS OF ALL SCREW THREADS 30°
CUT ROUND, 1.5 THREAD RELIEF ON MACHINED THREADS
BREAK EDGES .016 MAX. ON MACHINED WORK
REMOVE BURRS, WELD SPLATTER & LOOSE SCALE
IN ACCORDANCE WITH ASME Y14.5M & B46.1

ITEM	PART NO.	REQD	DESCRIPTION	MATERIAL
2	-	6	M5 CAPTIVE NUT, PEM AC-M5-1-SF	SS
1	-	1	COPPER SHEET, .125 THICK	COPPER, OFHC, C101

SHOP ORDERS
ACCT NO. / NO. REQD
SEL NO.
SURFACE TREATMT. -
IDENT METHOD TAG
PROJECT NUMBER N/A
PROJECT NAME N/A
DWN BY R. LA MANTIA DATE 15-Feb-02
CHK BY JON ZBASNIK DATE 13-AUG-02
APP BY JON ZBASNIK DATE 13-AUG-02
GEN NO. -
DATE ISSD -
DATE REQD -

ERNEST ORLANDO LAWRENCE BERKELEY NATIONAL LABORATORY
UNIVERSITY OF CALIFORNIA - BERKELEY

LHC IR FEEDBOX
CRYOGENICS
TOP SHIELD, DFBXA/DFBXC/DFBXG

MICROFILMED: | DWG. TYPE: ASSEM | SHOWN ON: - | SCALE: 3/8 | DO NOT SCALE PRINTS
PATENT CLEAR: | DESIGN ACCT. NO.: 5ZLCE2 | CATEGORY CODE: LH2003 | DWG. NO.: 2510716 | SIZE: C | REV.:
SHEET 1 OF 3

DWG. NO. 2510716 SIZE C REV 1

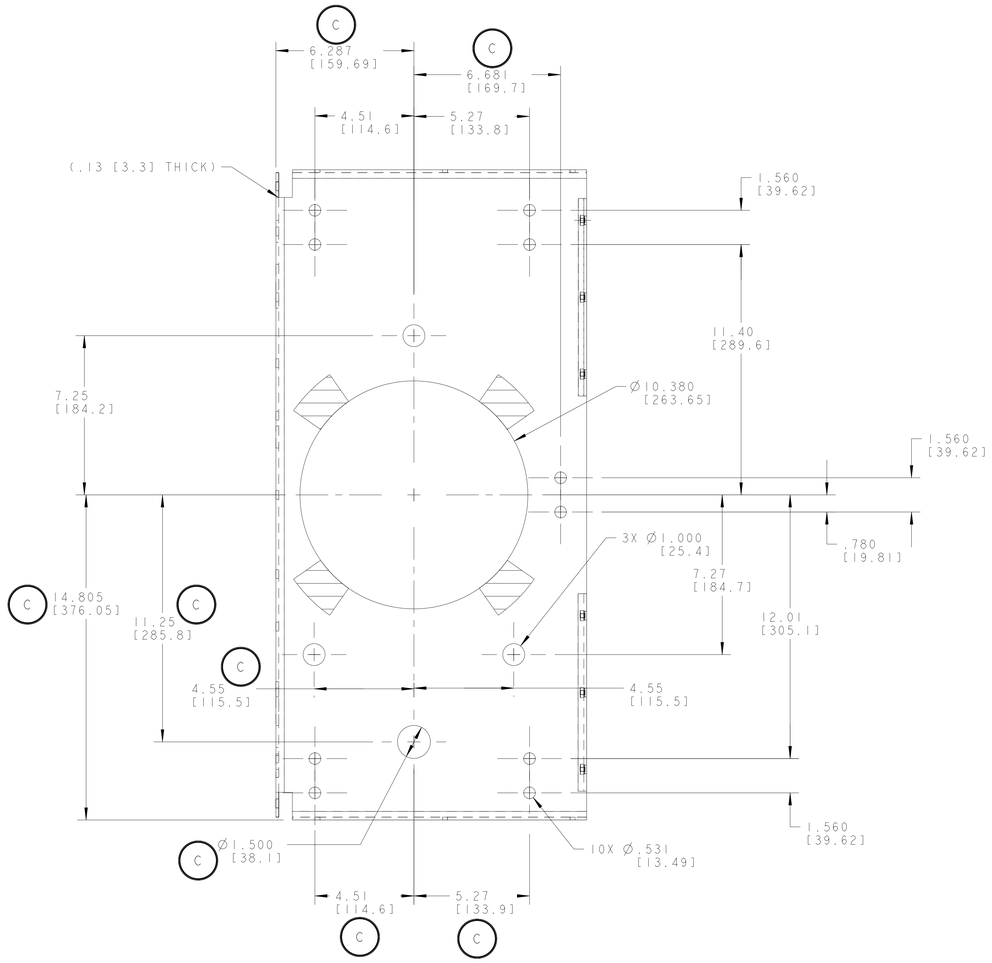

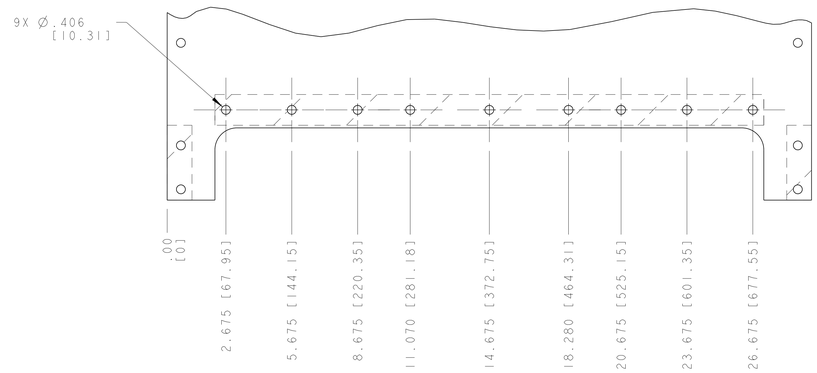

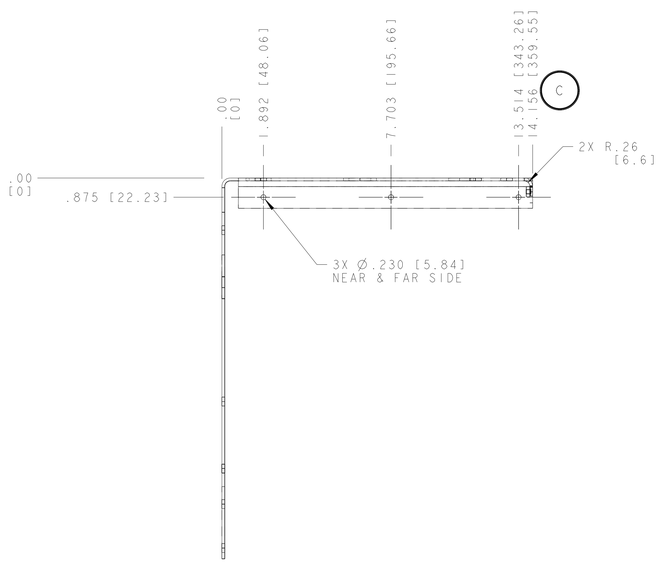

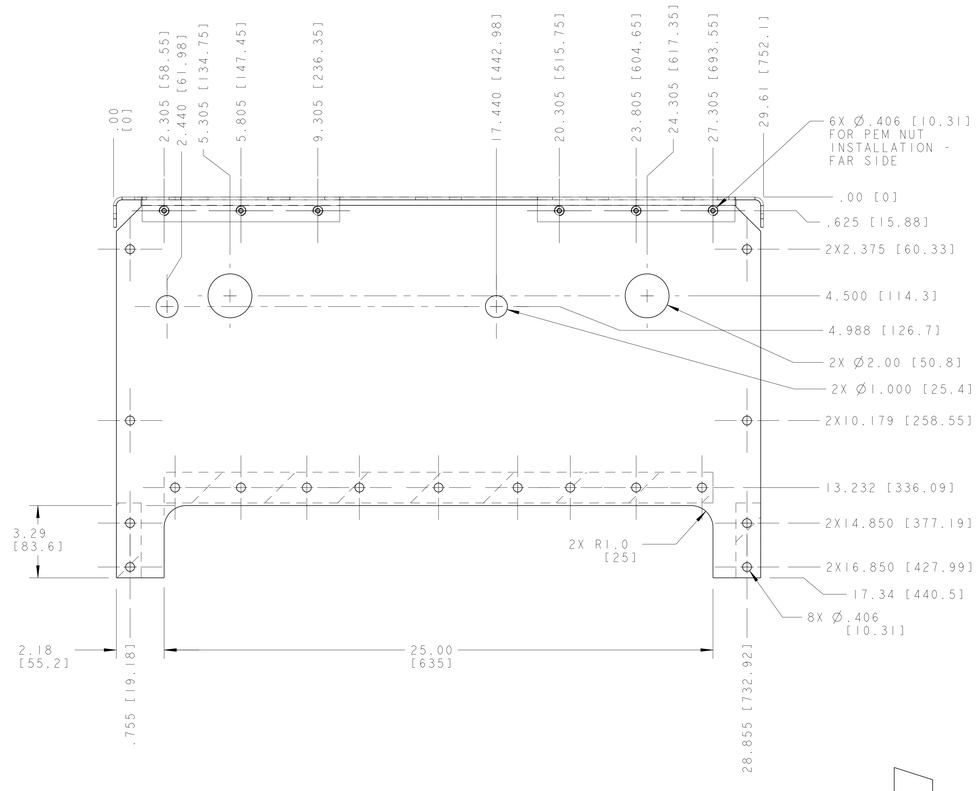

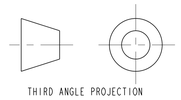

THIRD ANGLE PROJECTION

ERNEST ORLANDO LAWRENCE BERKELEY NATIONAL LABORATORY
UNIVERSITY OF CALIFORNIA - BERKELEY

LHC IR FEEDBOX
CRYOGENICS
TOP SHIELD, DFBXA/DFBXC/DFBXG

MICROFILMED:	DWG. TYPE: ASSEM	SHOWN ON: -	SCALE: 3/8	DO NOT TOUCH PRINTS
			SHEET 2 OF 3	
PATENT CLEAR:	DESIGN ACCT. NO.: 5ZLCE2	CATEGORY CODE: LH2003	DWG. NO.: 2510716	SIZE: C / REV.:

DWG. NO. 2510716 SIZE: C REV.: SHT. 2

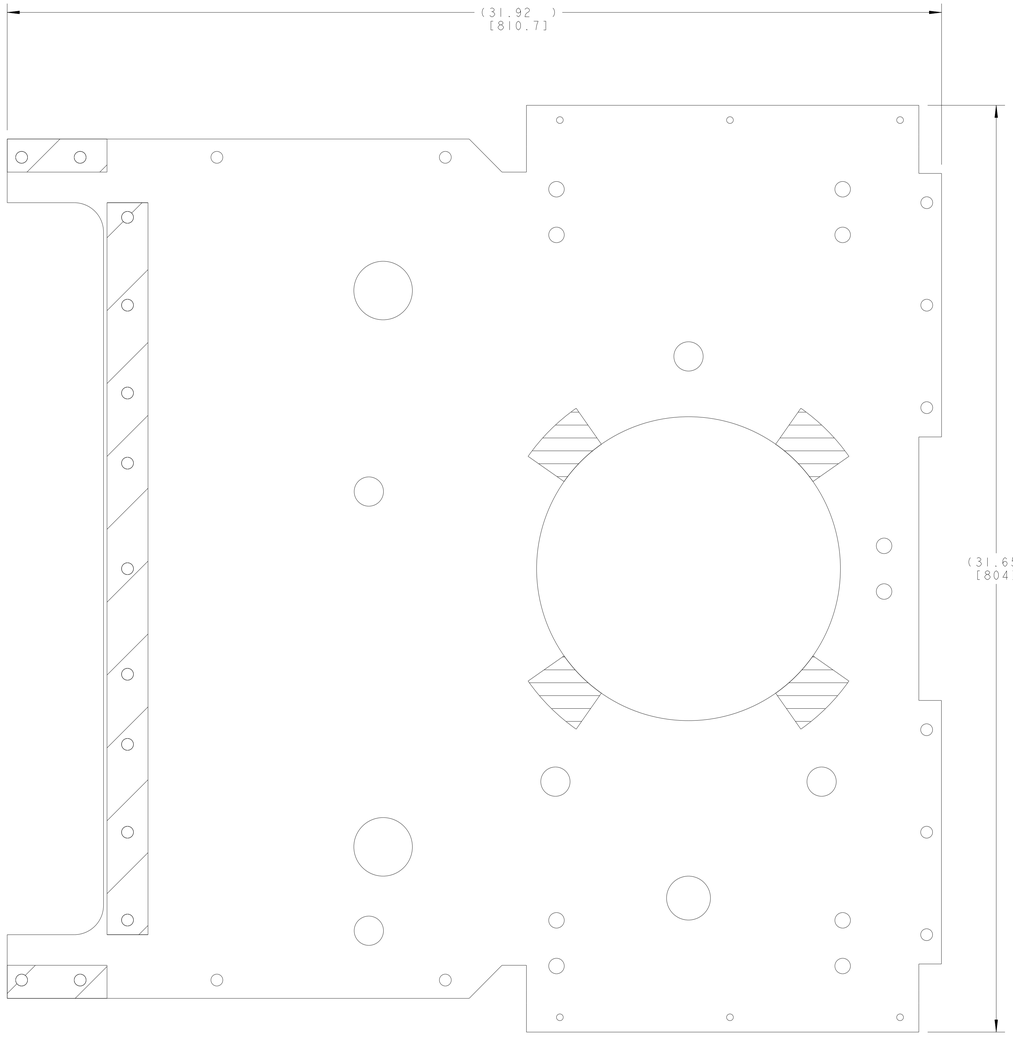

SCALE 1/2

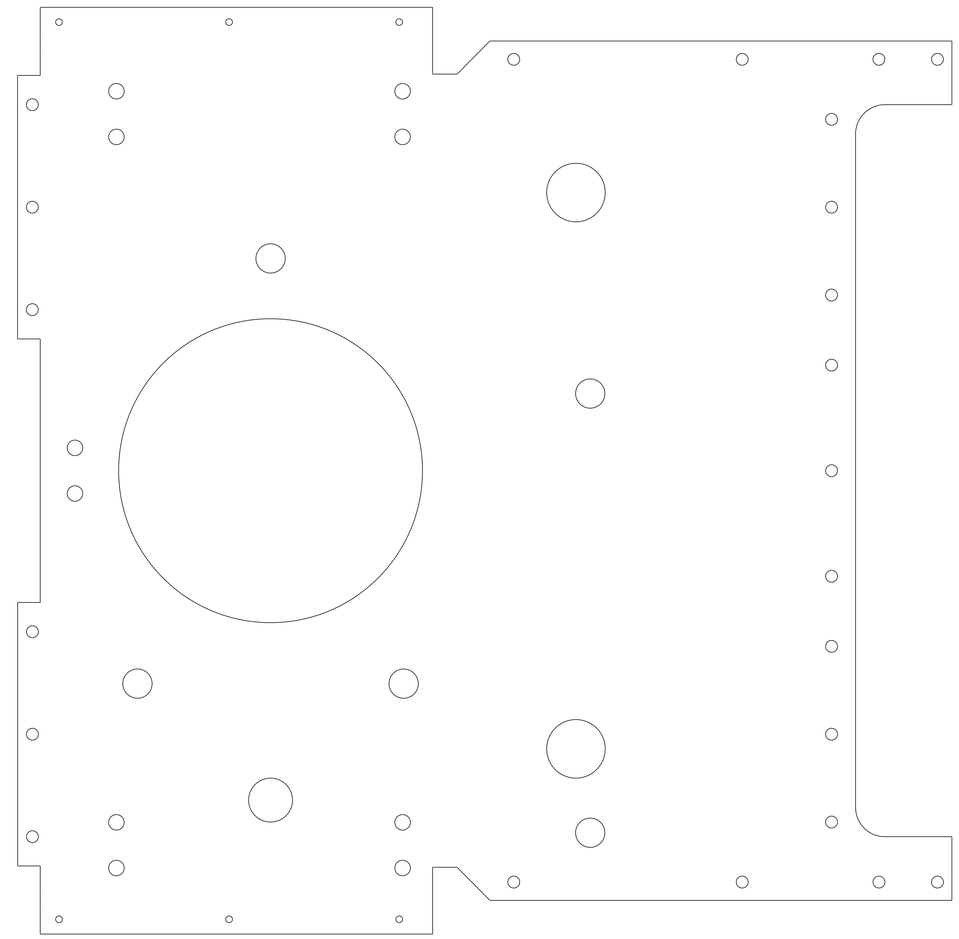

FLAT PATTERN
SCALE: 1/2

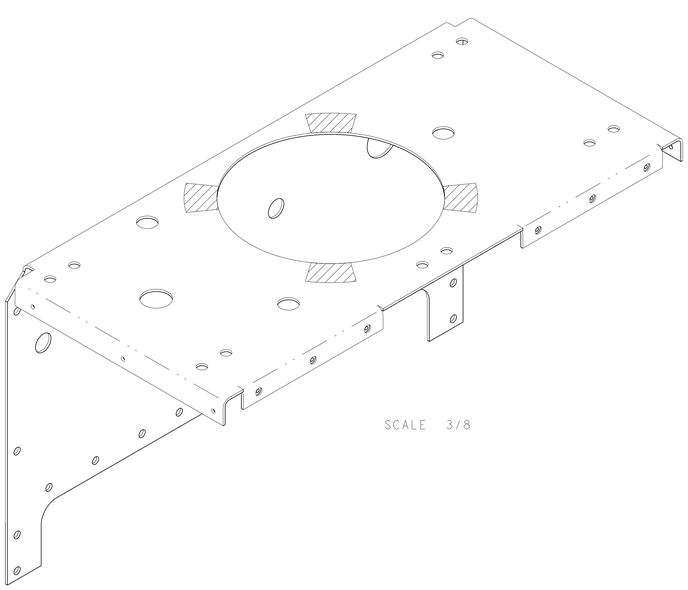

SCALE 3/8

ERNEST ORLANDO LAWRENCE BERKELEY NATIONAL LABORATORY UNIVERSITY OF CALIFORNIA - BERKELEY				
LHC IR FEEDBOX CRYOGENICS TOP SHIELD, DFBXA/DFBXC/DFBXG				
MICROFILMED:	DWG. TYPE ASSEM	SHOWN ON -	SCALE: 3/8	DO NOT SCALE PRINTS
			SHEET 3 OF 3	
PATENT CLEAR:	DESIGN ACCT. NO. 5ZLCE2	CATEGORY CODE LH2003	DWG. NO. 2510716	SIZE / REV. C

DWG. NO. 2510716 SIZE / REV. C SH. 3