NOTE:
1. DERIVED FROM SPECIFICATION LHC-DFBX-ES-100
2. DERIVED FROM SPECIFICATION LHC-DFBX-ES-200
3. DERIVED FROM SPECIFICATION LHC-DFBX-ES-210
4. DERIVED FROM SPECIFICATION LHC-DFBX-ES-240
5. DERIVED FROM SPECIFICATION LHC-DFBX-ES-260
6. DERIVED FROM SPECIFICATION LHC-DFBX-ES-250
7. DERIVED FROM SPECIFICATION LHC-DFBX-ES-230
8. FILL MOUNTING HOLES WITH EPOXY
9. HTS CURRENT LEAD IN SPECIFICATION M923B

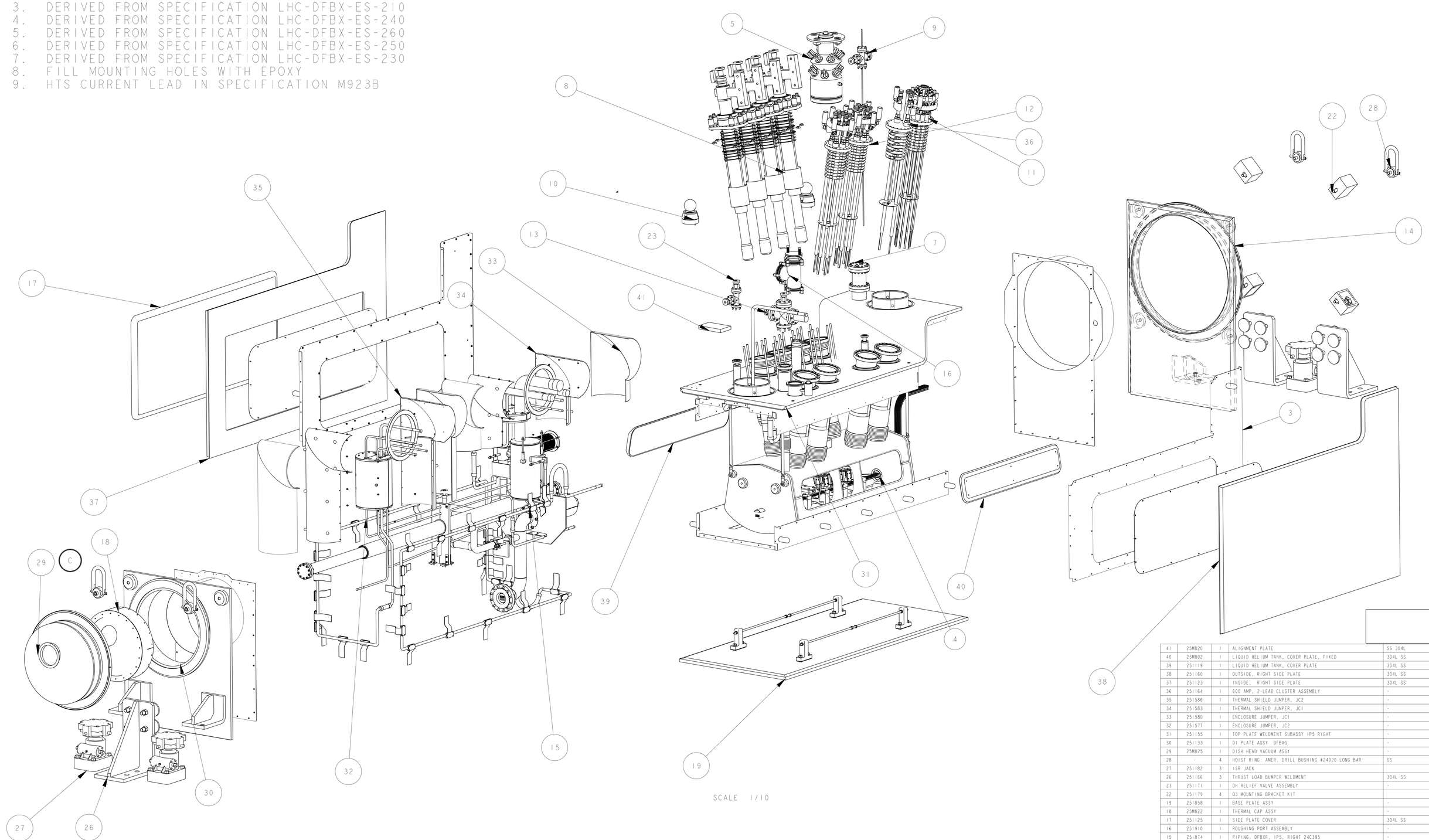

SCALE 1/10

ITEM	PART NO	REQD	DESCRIPTION	MATERIAL
41	25M820	1	ALIGNMENT PLATE	SS 304L
40	25M802	1	LIQUID HELIUM TANK, COVER PLATE, FIXED	304L SS
39	251119	1	LIQUID HELIUM TANK, COVER PLATE	304L SS
38	251160	1	OUTSIDE, RIGHT SIDE PLATE	304L SS
37	251123	1	INSIDE, RIGHT SIDE PLATE	304L SS
36	251164	1	600 AMP, 2-LEAD CLUSTER ASSEMBLY	-
35	251586	1	THERMAL SHIELD JUMPER, JC2	-
34	251583	1	THERMAL SHIELD JUMPER, JC1	-
33	251580	1	ENCLOSURE JUMPER, JC1	-
32	251577	1	ENCLOSURE JUMPER, JC2	-
31	251155	1	TOP PLATE WELDMENT SUBASSY IP5 RIGHT	-
30	251133	1	D1 PLATE ASSY DFBXG	-
29	25M825	1	DISH HEAD VACUUM ASSY	-
28	-	4	HOIST RING: AMER. DRILL BUSHING #24020 LONG BAR	SS
27	251182	3	ISR JACK	
26	251166	3	THRUST LOAD BUMPER WELDMENT	304L SS
23	251171	1	DH RELIEF VALVE ASSEMBLY	-
22	251179	4	Q3 MOUNTING BRACKET KIT	
19	251858	1	BASE PLATE ASSY	-
18	25M822	1	THERMAL CAP ASSY	-
17	251125	1	SIDE PLATE COVER	304L SS
16	251910	1	ROUGHING PORT ASSEMBLY	-
15	251874	1	PIPING, DFBXF, IP5, RIGHT 24C395	-
14	251129	1	Q3 PLATE ASSY	-
13	251339	1	HELIUM PORT RELIEF VALVE ASSEMBLY	-
12	24C353	2	600 AMP,6 LEAD VAPOR COOLED ASSY	-
11	24C322	1	120 AMP VC LEAD MOUNTING ASSY	-
10	251868	2	TOOLING BALL, LHCGIMSA00092	-
9	251162	1	LHE DIAGNOSTIC ASSY	-
8	251156	6	PIRELLI HTS LEAD KIT	-
7	251851	1	HELIUM GUARD ASSEMBLY	-
5	251831	1	LQX DIAGONSTIC ASSEMBLY	-
4	251864	1	BUS DUCT ASSEMBLY	-
3	251079	1	THERMAL SHIELD ASSY, DFBXG	-

11. SOLDER JOINT USING SN60PB40 SOLDER; ROSIN FLUX, USE SPLICE PLATE IF REQUIRED
12. CLOSEOUT WELD PROCEDURE TO BE APPROVED BY LBNL
    DISTORTION CONTROL IS ESSENTIAL, ROOT PASS GTAW, COVER PASSES GMAW, SMAW, FCMAW.
13. WELD PROCEDURE TO BE APPROVED BY LBNL, USE GTAW PROCESS
14. BELLOWS TO BE WITHIN 0.03" OF FREE CONFIGURATION AFTER CLOSEOUT WELDING
15. DIMENSIONS FROM DFBX FLANGE FACE ON D1 SIDE, ADD -2367.2 MM TO OBTAIN POSITION
    RELEATIVE TO DFBX COORDINATE SYSTEM
16. SHIM TANK SUPPORTS TO LIMIT STATIC DEFLECTION OF THE LOWER TANK SUPPORT RODS
    TO LESS THAN 0.25"
17. DIMENSIONS SHOW IN INSPECTION OVAL ARE REFERENCED IN THE FABRICATION TRAVELER
18. COPPER STRAP ATTACHED TO THE THERMAL ANCHORS DO NOT HAVE TO BE EVENLY SPACED.
19. ALL DIMENSIONS GIVEN AT ROOM TEMPERATURE

THIRD ANGLE PROJECTION

REV	DWG	CHK	ZONE	DATE	CHANGES
C	JDR	DPO		02/24/03	CHANGED PIPE END LOCATIONS CHANGED WELD ON SIDE PLATE COVER ADDED DISH HEAD VACUUM ASSY
B	JDR	DPO		12/12/02	INITIAL RELEASE
A	JDR	DPO		10/03/02	PRELIMINARY RELEASE

UNLESS OTHERWISE SPECIFIED
TOLERANCES
X.X ± 0.1 FRAC. ± 1/64
X.XX ± 0.03 Angles ± 1.00°
X.XXX ± 0.010 FINISH 125 √(μin)
DO NOT SCALE PRINT
THREADS ARE CLASS 2
CHAMFER ENDS OF ALL SCREW THREADS 30°
CUT ROUND, 1.5 THREAD RELIEF ON MACHINED THREADS
BREAK EDGES .015 MAX. ON MACHINED WORK
REMOVE BURRS, WELD SPLATTER & LOOSE SCALE
IN ACCORDANCE WITH ASME Y14.5M & B46.1

SHOP ORDERS
ACCT NO. / REQD
DEL TO
SURFACE TREATMT
IDENT METHOD TAG
PROJECT NUMBER
PROJECT NAME N/A
DWG BY M J KNOLLS DATE 02-Nov-01
CHK BY Jon Zbasnik DATE 03-OCT-02
APP BY Jon Zbasnik DATE 03-OCT-02
SER NO.
DATE ISSD
DATE REQD

ERNEST ORLANDO LAWRENCE
BERKELEY NATIONAL LABORATORY
UNIVERSITY OF CALIFORNIA : BERKELEY

LHC IR FEEDBOX
MAJOR ASSEMBLY
DFBXF (IP5,RIGHT) FEED BOX ASSY, IP5 (RIGHT)

MICROFILMED: | DWG. TYPE: ASSEM | SHOWN ON: - | SCALE: 1:3/100 | DO NOT SCALE PRINTS
SHEET 1 OF 11
PATENT CLEAR: | DESIGN ACCT. NO.: Z5LCE2 | CATEGORY CODE: LH2001 | DWG. NO.: 24C3956 | SIZE: C | REV.: C

DWG. NO. 24C3956 C 1

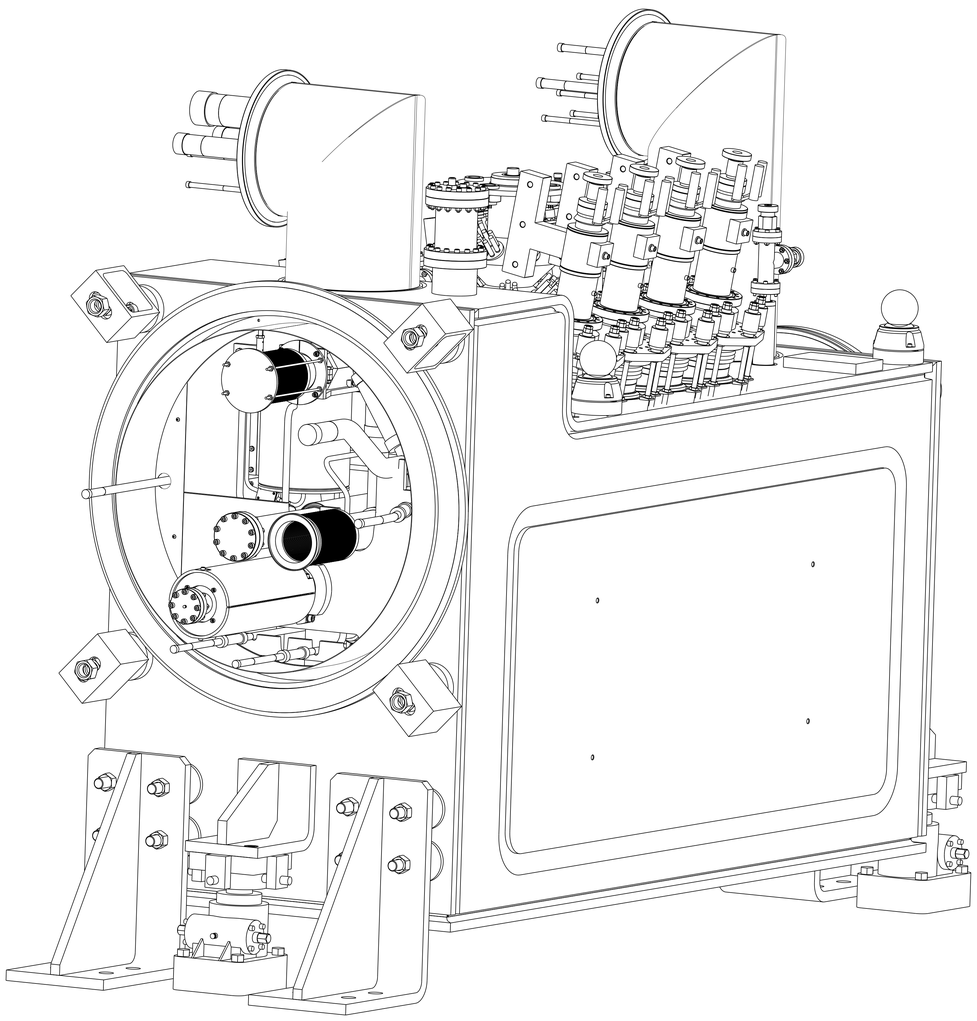

Q3 END

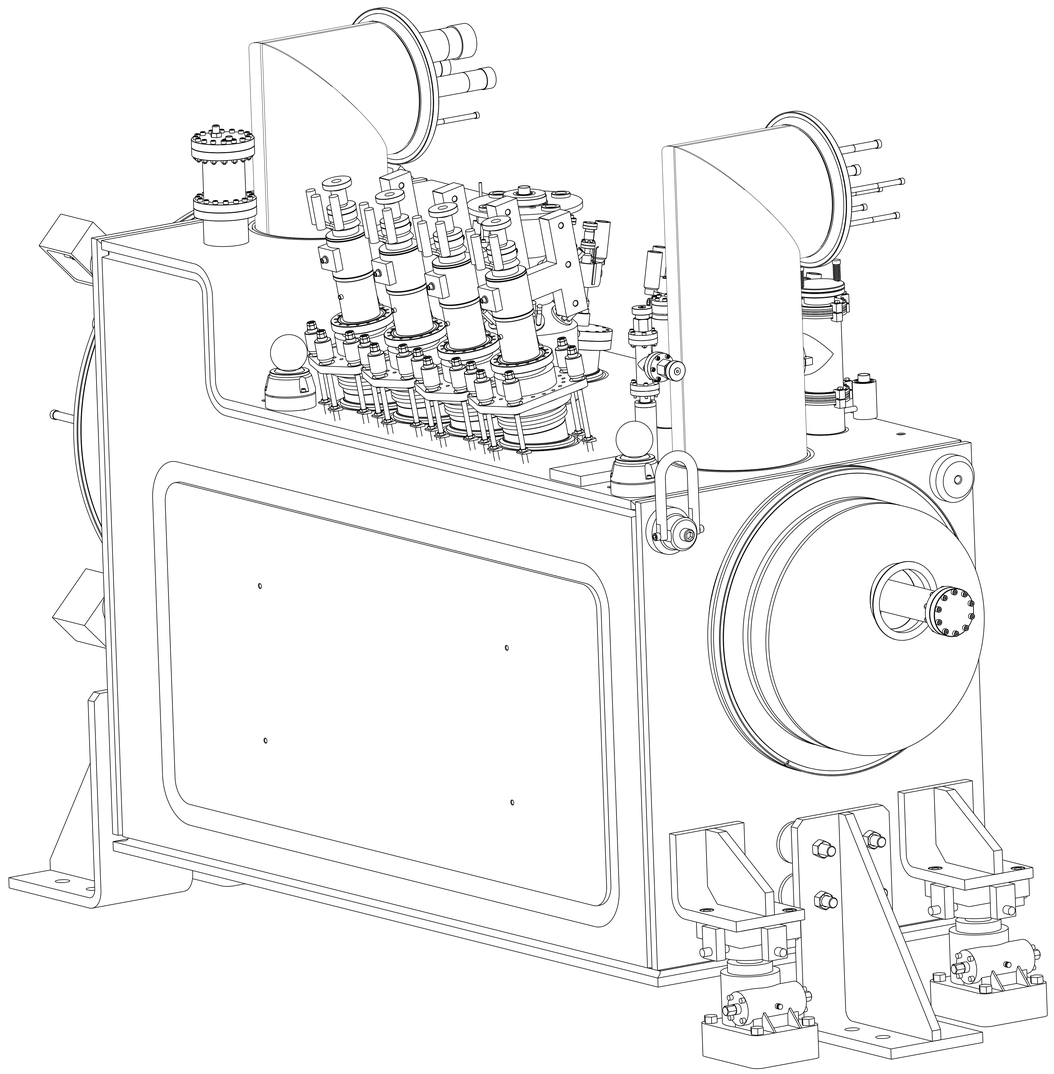

D1 END

DFBXF, IP5 (RIGHT)

THIRD ANGLE PROJECTION

ERNEST ORLANDO LAWRENCE
BERKELEY NATIONAL LABORATORY
UNIVERSITY OF CALIFORNIA - BERKELEY

LHC IR FEEDBOX
MAJOR ASSEMBLY
DFBXF (IP5,RIGHT) FEED BOX ASSY, IP5 (RIGHT)

MICROFILMED:	DWG. TYPE	SHOWN ON	SCALE: 9/50	DO NOT SCALE PRINTS
	ASSEM	-	SHEET 2 OF 11	
PATENT CLEAR:	DESIGN ACCT. NO.	CATEGORY CODE	DWG. NO.	SIZE / REV.
	Z5LCE2	LH2001	24C3956	C

DWG. NO. 24C3956 SIZE / REV. C SH. 2

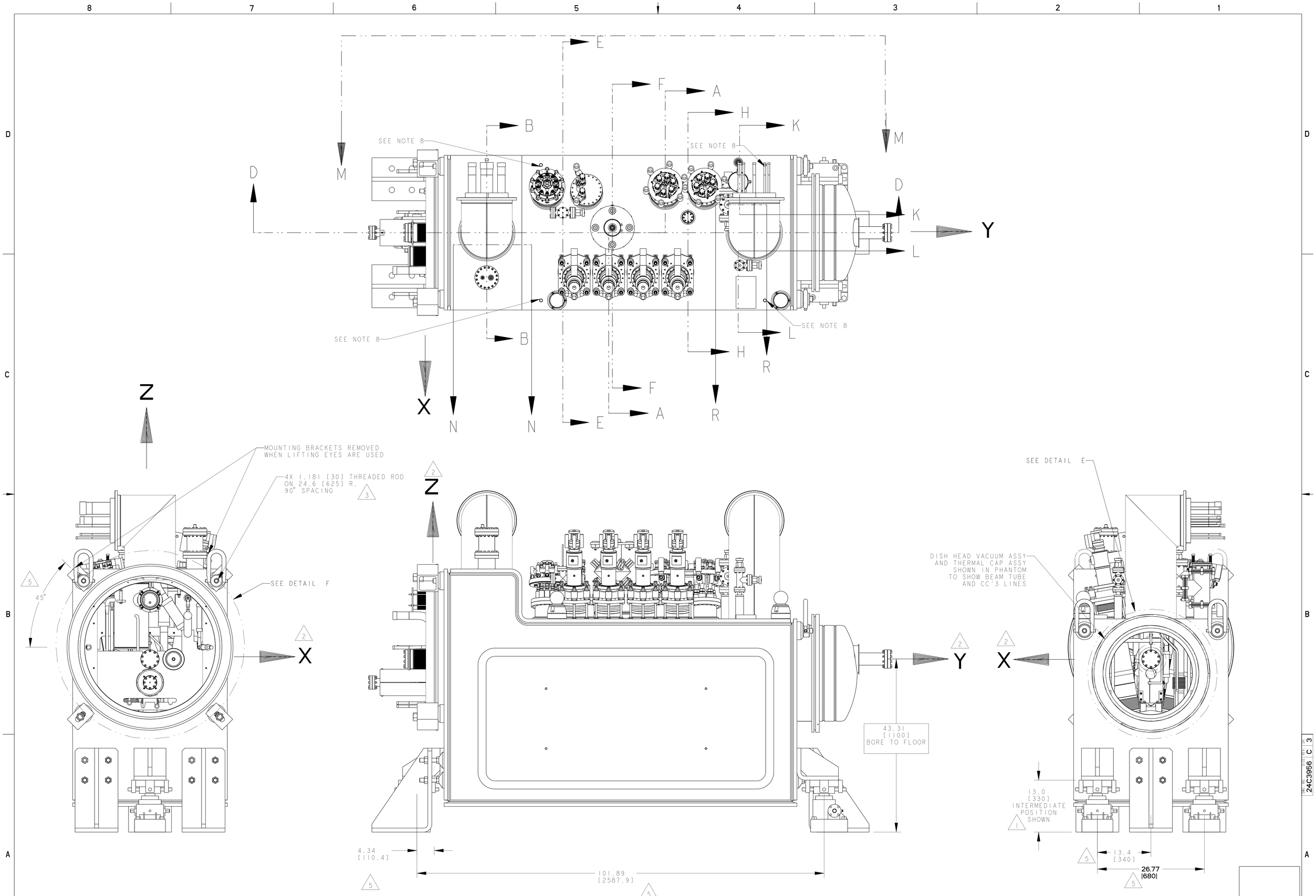

ERNEST ORLANDO LAWRENCE BERKELEY NATIONAL LABORATORY
UNIVERSITY OF CALIFORNIA - BERKELEY

LHC IR FEEDBOX
MAJOR ASSEMBLY
DFBXF (IP5,RIGHT) FEED BOX ASSY, IP5 (RIGHT)

MICROFILMED:	DWG. TYPE	SHOWN ON	SCALE: 13/100	DO NOT SCALE PRINTS
	ASSEM	-	SHEET 3 OF 11	
PATENT CLEAR:	DESIGN ACCT. NO.	CATEGORY CODE	DWG. NO.	SIZE / REV.
	Z5LCE2	LH2001	24C3956	C

DWG. NO. 24C3956 SIZE C REV. 3

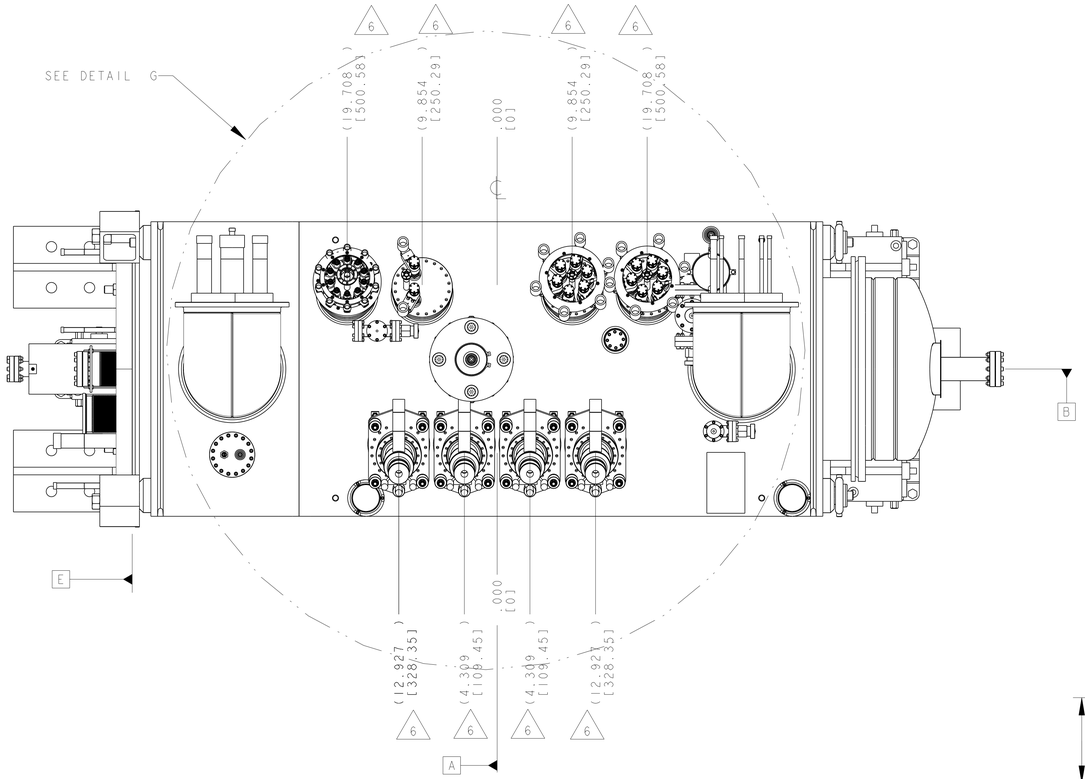

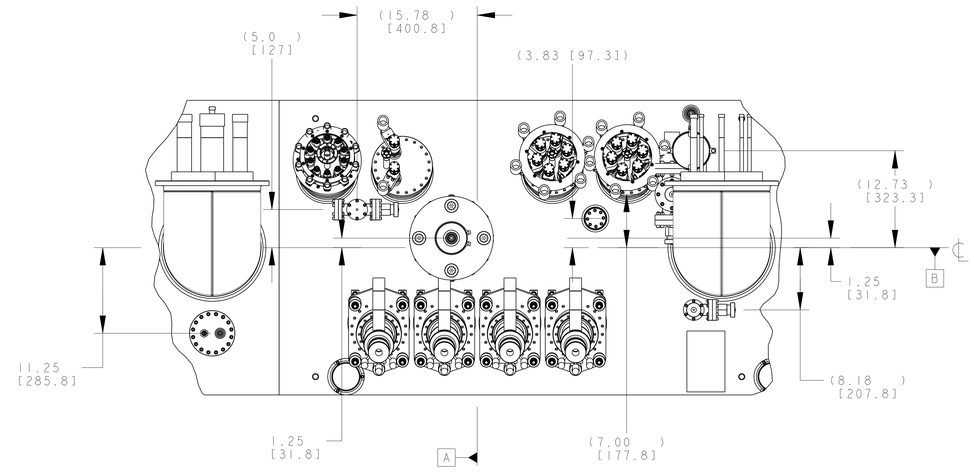

DETAIL G
SCALE 1 3/100

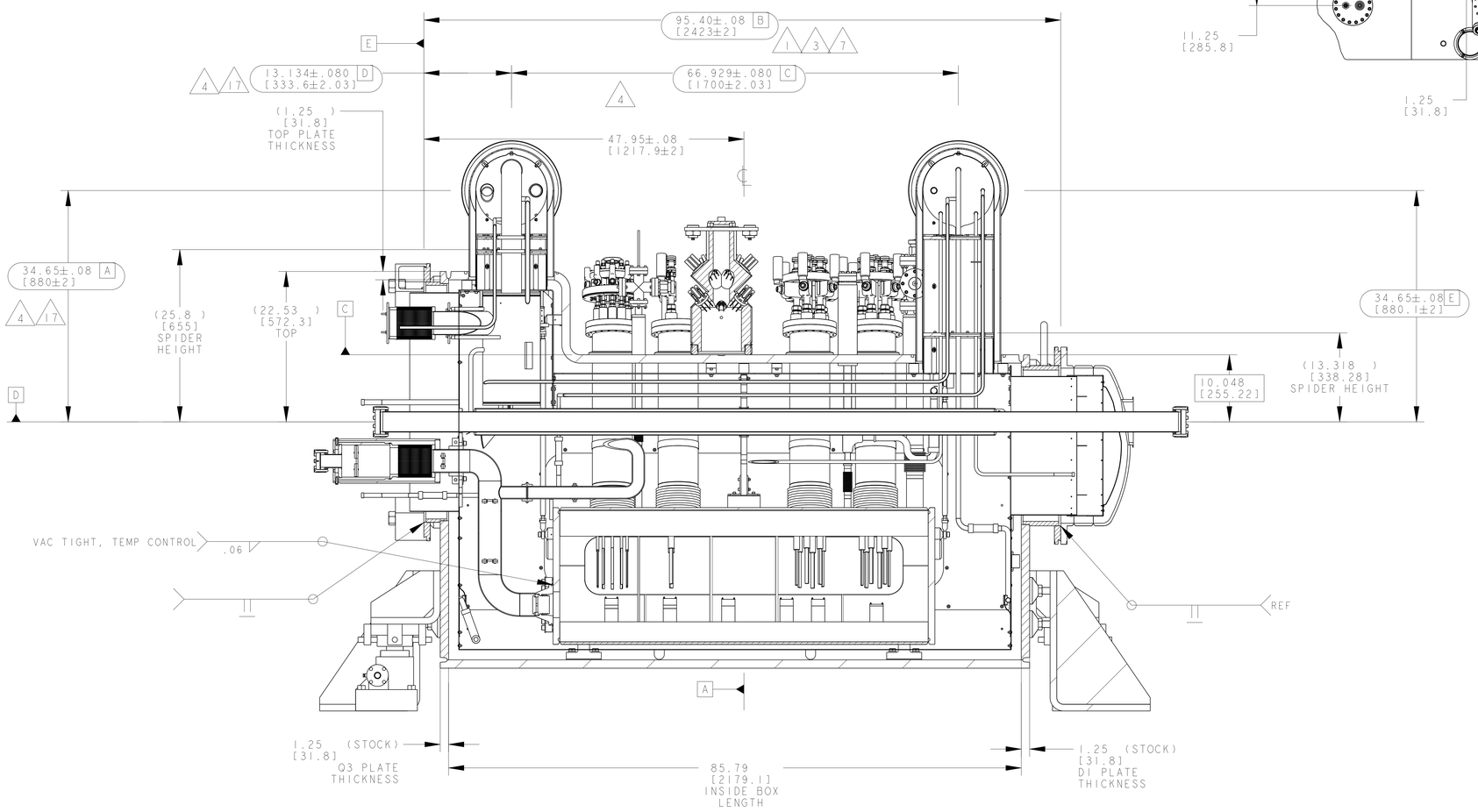

SECTION D - D
SCALE 1 3/100

THIRD ANGLE PROJECTION

ERNEST ORLANDO LAWRENCE BERKELEY NATIONAL LABORATORY
UNIVERSITY OF CALIFORNIA - BERKELEY

LHC IR FEEDBOX
MAJOR ASSEMBLY
DFBXF (IP5,RIGHT) FEED BOX ASSY, IP5 (RIGHT)

MICROFILMED:	DWG. TYPE	SHOWN ON	SCALE: 1 3/100	DO NOT SCALE PRINTS
	ASSEM	-	SHEET 4 OF 11	
PATENT CLEAR:	DESIGN ACCT. NO.	CATEGORY CODE	DWG. NO.	SIZE / REV.
	Z5LCE2	LH2001	24C3956	C

DWG. NO. 24C3956 SIZE / REV. C 4

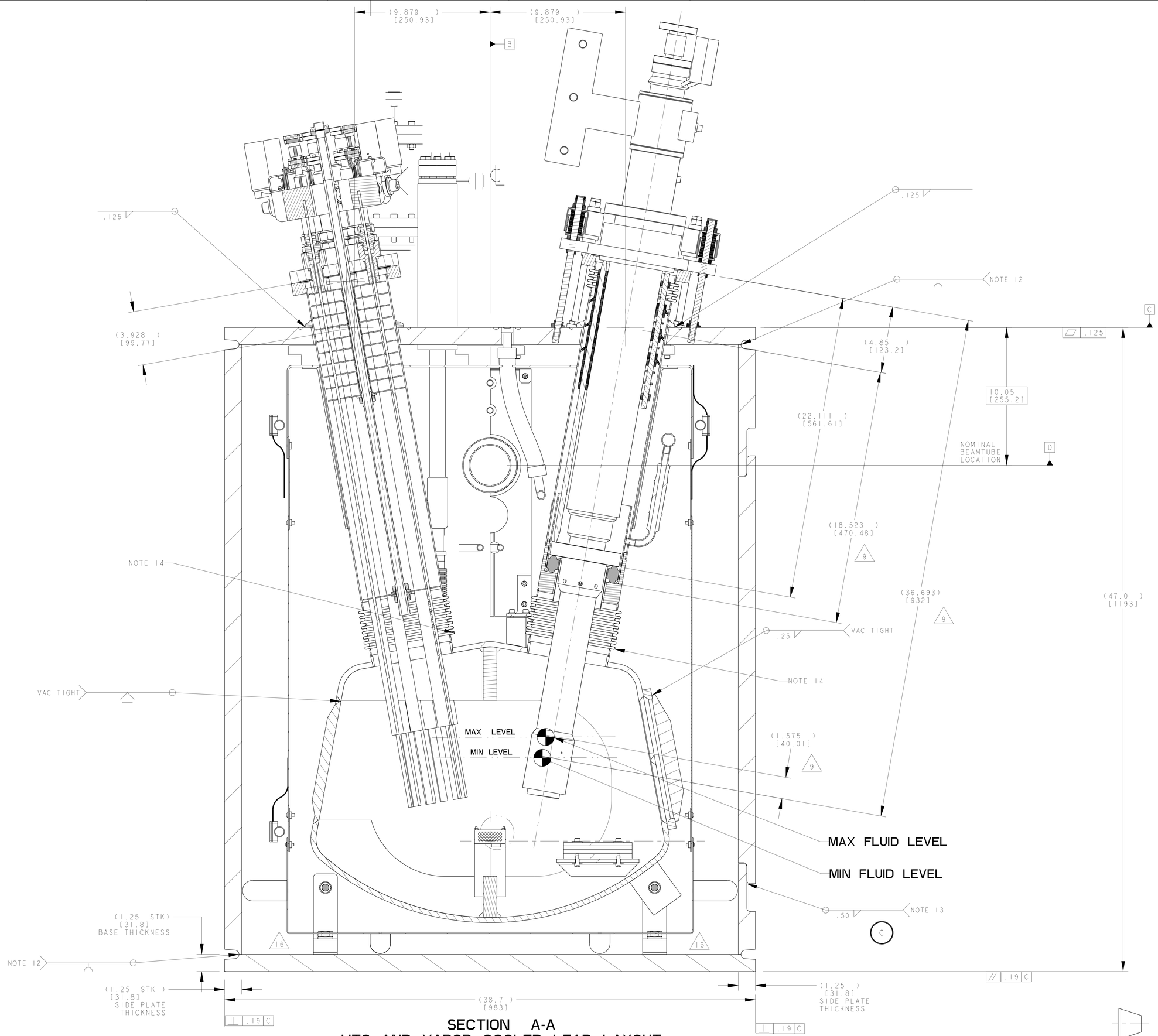

SECTION A-A
HTS AND VAPOR COOLED LEAD LAYOUT
SCALE 2/5

THIRD ANGLE PROJECTION

ERNEST ORLANDO LAWRENCE
BERKELEY NATIONAL LABORATORY
UNIVERSITY OF CALIFORNIA · BERKELEY

LHC IR FEEDBOX
MAJOR ASSEMBLY
DFBXF (IP5,RIGHT) FEED BOX ASSY, IP5 (RIGHT)

MICROFILMED:	DWG. TYPE	SHOWN ON	SCALE: 1:3/100	DO NOT SCALE PRINTS
	ASSEM	-	SHEET 5 OF 11	
PATENT CLEAR:	DESIGN ACCT. NO.	CATEGORY CODE	DWG. NO.	SIZE / REV.
	Z5LCE2	LH2001	24C3956	C

DWG. NO. 24C3956 SHEET 5 REV. C

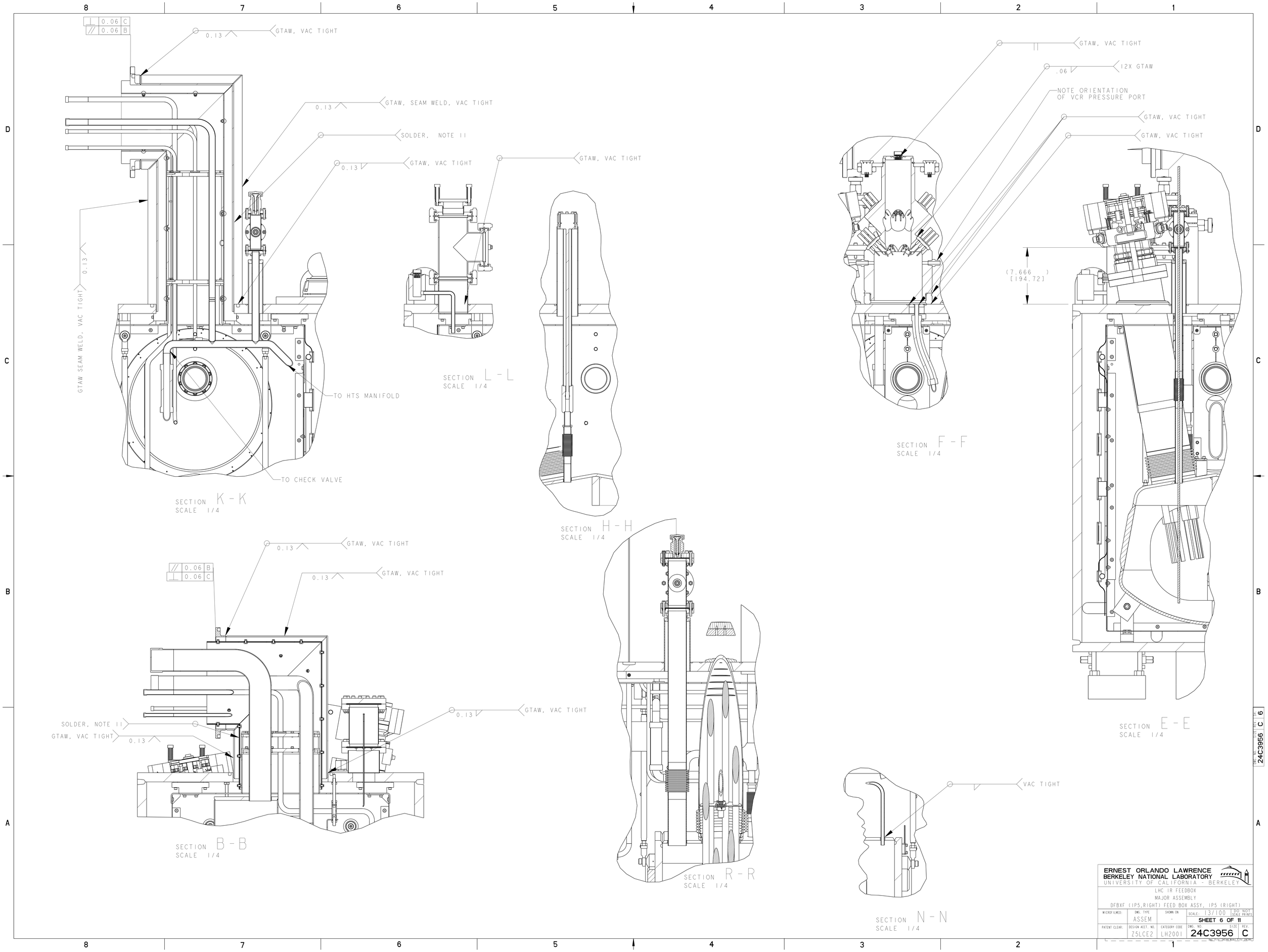

ERNEST ORLANDO LAWRENCE
BERKELEY NATIONAL LABORATORY
UNIVERSITY OF CALIFORNIA - BERKELEY

LHC IR FEEDBOX
MAJOR ASSEMBLY
DFBXF (IP5,RIGHT) FEED BOX ASSY, IP5 (RIGHT)

MICROFILMED:	DWG. TYPE	SHOWN ON	SCALE: 13/100	DO NOT SCALE PRINTS
	ASSEM	-	SHEET 6 OF 11	
PATENT CLEAR:	DESIGN ACCT. NO.	CATEGORY CODE	DWG. NO.	SIZE / REV.
	Z5LCE2	LH2001	24C3956	C

DWG. NO. 24C3956 SIZE C REV. 6

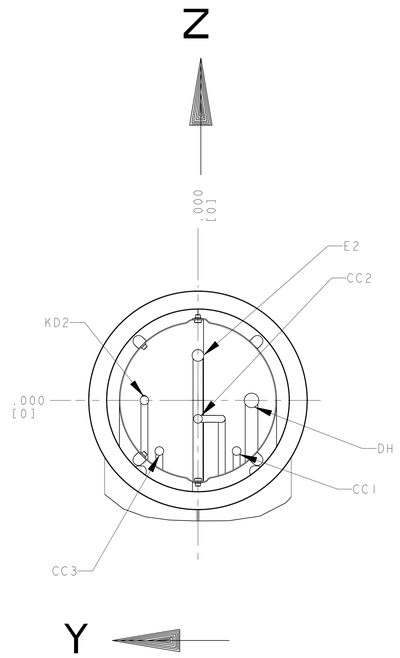

		DIM'S MEASURED FROM FLANGE CENTER	
PIPE	X	Y ±0.08	Z ±0.08
E2	-14.45±.08 [367±2]	0	3.07 [78]
DH	-14.45±.08 [367±2]	-3.66 [93]	0
KD2	-14.45±.08 [367±2]	3.66 [93]]	0
CC2	-14.45±.08 [367±2]	0	-1.26 [32]
CC1	-14.45±.08 [367±2]	-2.64 [67]	-3.46 [88]
CC3	-14.45±.08 [367±2]	2.64 [67]	-3.46 [88]

4

DETAIL D
JC2 / QQSD
DIMENSIONAL TOLERANCE ± 0.08
ORIENTATION OPPOSITE OF SPECIFICATION 240
SCALE 1/4

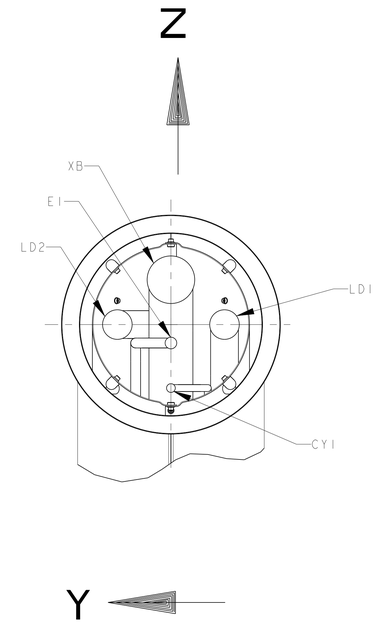

		DIM'S MEASURED FROM FLANGE CENTER	
PIPE	X	Y ±0.08	Z ±0.08
XB	-14.45±.08 [367±2]	0	3.07 [78]
LD2	-14.45±.08 [367±2]	3.66 [93]	0
LD1	-14.45±.08 [367±2]	-3.66 [93]	0
E1	-14.45±.08 [367±2]	0	-1.26 [32]
CY1	-14.45±.08 [367±2]	0	-4.33 [110]

4

DETAIL C
JC1 / QQSC
DIMENSIONAL TOLERANCE ± 0.08
ORIENTATION OPPOSITE OF SPECIFICATION 240
SCALE 1/4

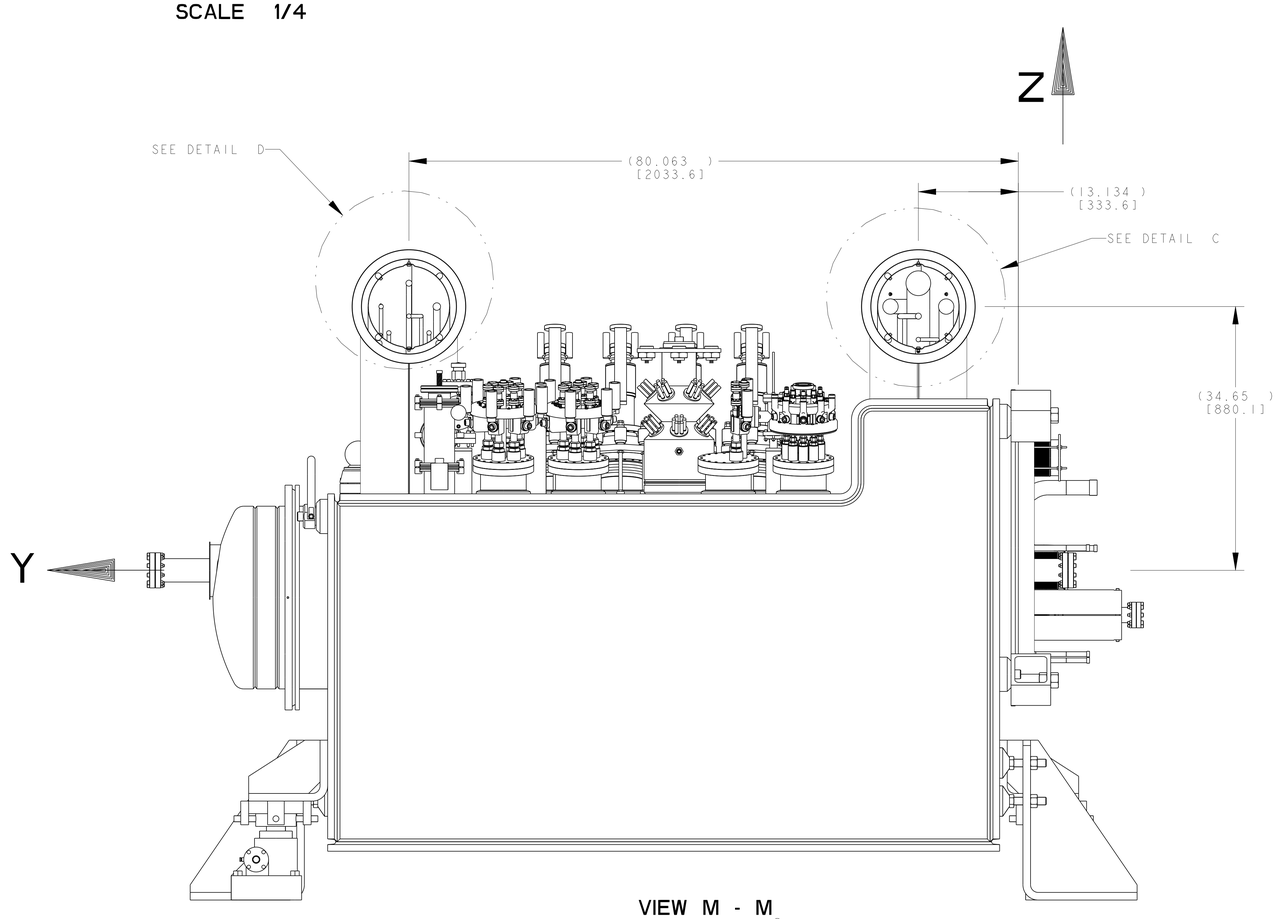

VIEW M - M
ROTATED 180°

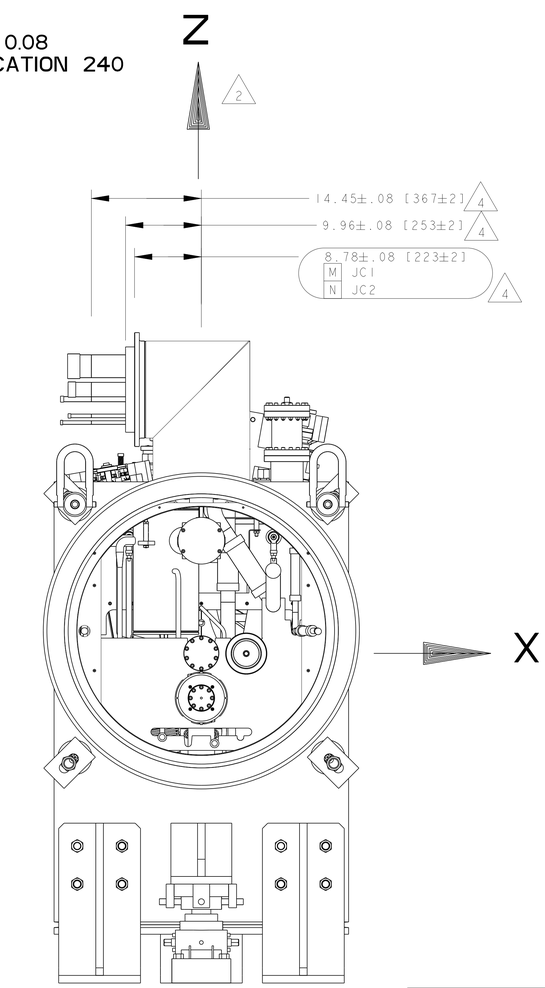

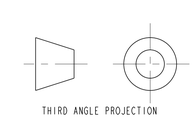

ERNEST ORLANDO LAWRENCE
BERKELEY NATIONAL LABORATORY
UNIVERSITY OF CALIFORNIA - BERKELEY

LHC IR FEEDBOX
MAJOR ASSEMBLY
DFBXF (IP5,RIGHT) FEED BOX ASSY, IP5 (RIGHT)

MICROFILMED:	DWG. TYPE	SHOWN ON	SCALE: 13/100	DO NOT SCALE PRINTS
	ASSEM	-	SHEET 7 OF 11	
PATENT CLEAR:	DESIGN ACCT. NO.	CATEGORY CODE	DWG. NO.	SIZE	REV.
	Z5LCE2	LH2001	24C3956	C	

DWG. NO. 24C3956 SIZE C REV. 7

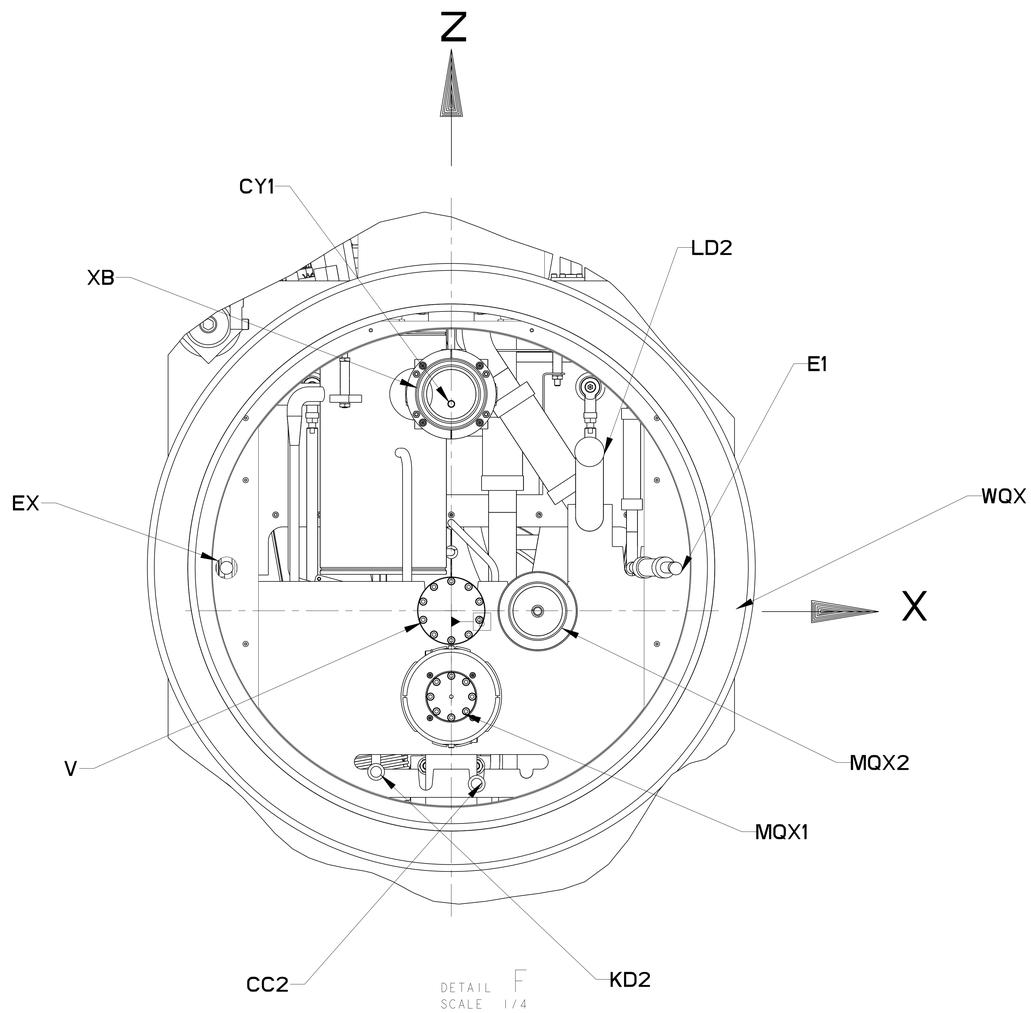

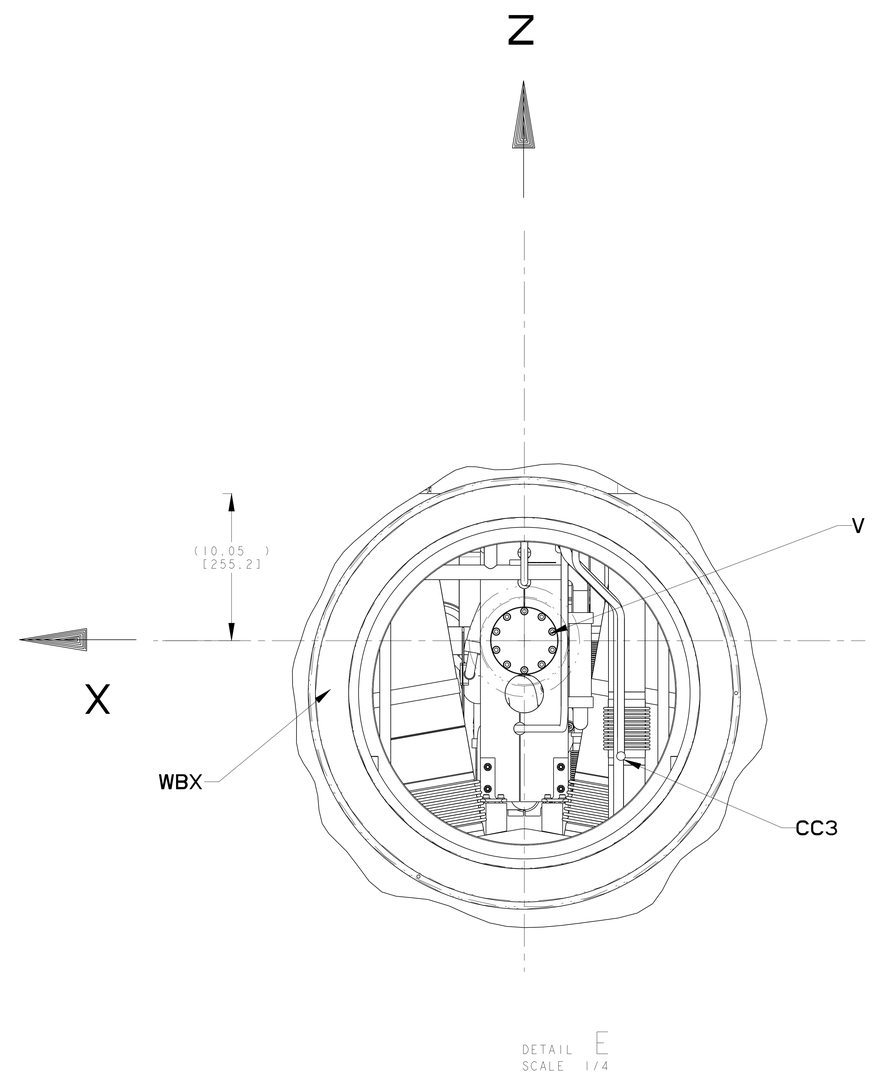

C

C

Q3 PIPING INTERFACE PER SPEC. LHC-DFBX-ES-210.00 REV 1.0					
DFBX	PIPE OD/ID		PIPE COORDINATES AT 300 K		
DFBX	OD in [mm]	ID in [mm]	X in [mm] ±.08	Z in [mm] ±.08	Y in [mm] ±.08
V	3.071 [78]	2.913 [73.99]	.000 [0]	.000 [0]	-2.032 [-51.61]
LD2	1.748 [44.4]	1.650 [41.91]	9.444 [239.88]	10.855 [275.72]	-6.299 [-159.99]
CC3	.626 [15.9]	.528 [13.41]	5.137 [130.48]	-11.822 [-300.28]	-6.299 [-159.99]
CC2	.626 [15.9]	.528 [13.41]	1.735 [44.07]	-11.822 [-300.28]	-6.299 [-159.99]
CY1	.626 [15.9]	.528 [13.41]	.000 [0]	14.126 [358.8]	-3.617 [-91.87]
E1	1.500 [38.1]	1.370 [34.8]	15.345 [389.76]	2.885 [73.28]	-6.299 [-159.99]
EX	1.500 [38.1]	1.370 [34.8]	-15.355 [-390.02]	2.929 [74.4]	-6.299 [-159.99]
MQX1	3.500 [88.9]	3.370 [85.6]	.000 [0]	-5.871 [-149.12]	-6.299 [-159.99]
MQX2	3.500 [88.9]	3.370 [85.6]	5.902 [149.91]	-.031 [-0.79]	-6.299 [-159.99]
WQX	41.535 [1055]	35.039 [890]	.000 [0]	2.953 [75.01]	.000 [0]
XB	3.500 [88.9]	3.370 [85.6]	.000 [0]	14.792 [375.72]	-5.118 [-130]

D1 PIPING INTERFACE PER SPEC. LHC-DFBX-ES-230.00 REV 1.1					
	PIPE OD/ID		PIPE COORDINATES AT 300 K		
DFBX	OD in [mm]	ID in [mm]	X in [mm] ±.08	Z in [mm] ±.08	Y in [mm] ±.08
V	3.06 [77.7]	2.91 [73.9]	.000 [0]	.000 [0]	13.504 [343]
CC3	.63 [16]	.53 [13.5]	-6.604 [-167.74]	-7.879 [-200.13]	14.843 [377.01]
WBX	29.53 [750.1]	23.50 [596.9]	.000 [0]	-3.528 [-89.61]	.000 [0]

15

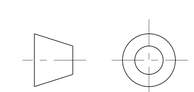

THIRD ANGLE PROJECTION

ERNEST ORLANDO LAWRENCE BERKELEY NATIONAL LABORATORY
UNIVERSITY OF CALIFORNIA - BERKELEY

LHC IR FEEDBOX
MAJOR ASSEMBLY
DFBXF (IP5,RIGHT) FEED BOX ASSY, IP5 (RIGHT)

MICROFILMED:	DWG. TYPE	SHOWN ON	SCALE: 13/100	DO NOT SCALE PRINTS
	ASSEM	-	SHEET 8 OF 11	
PATENT CLEAR:	DESIGN ACCT. NO.	CATEGORY CODE	DWG. NO.	SIZE / REV.
	Z5LCE2	LH2001	24C3956	C

DWG. NO. 24C3956 SIZE C REV. 8

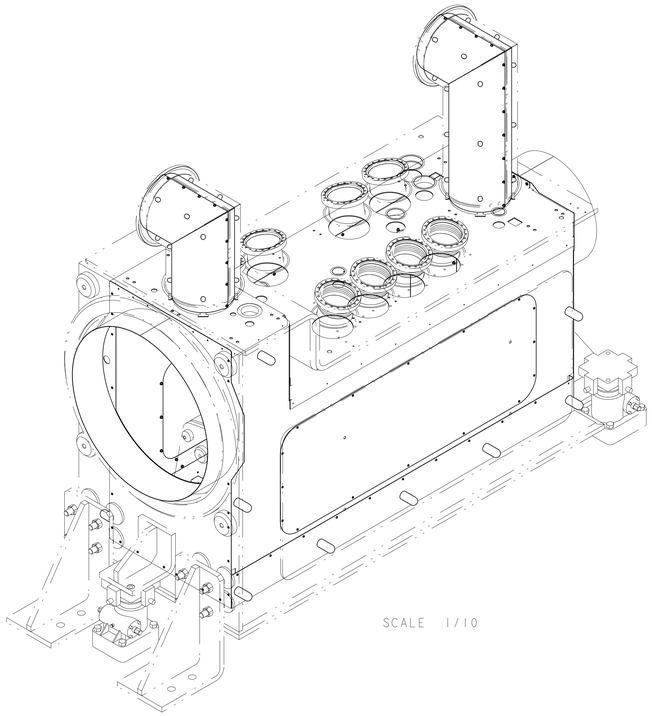

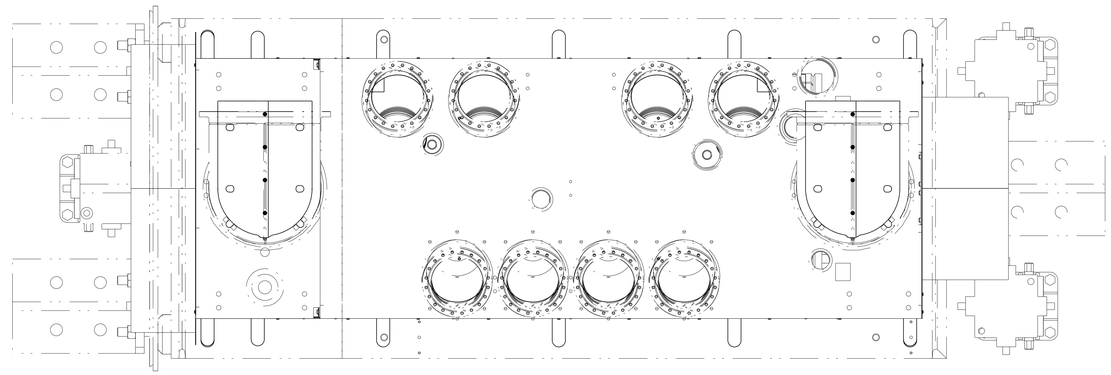

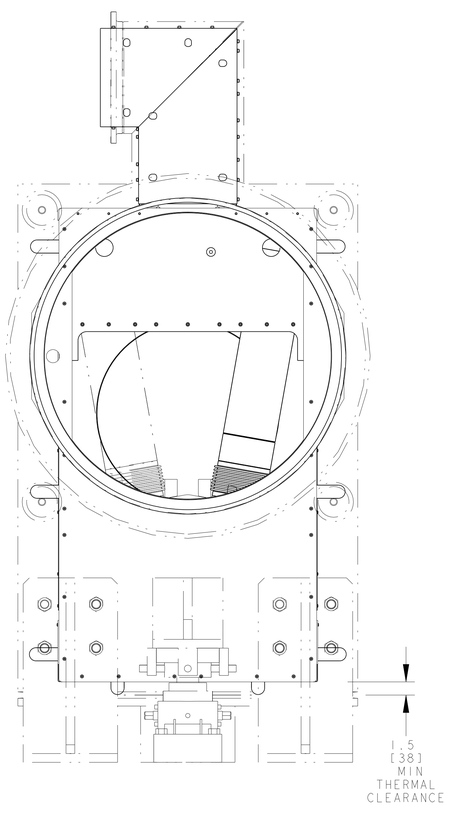

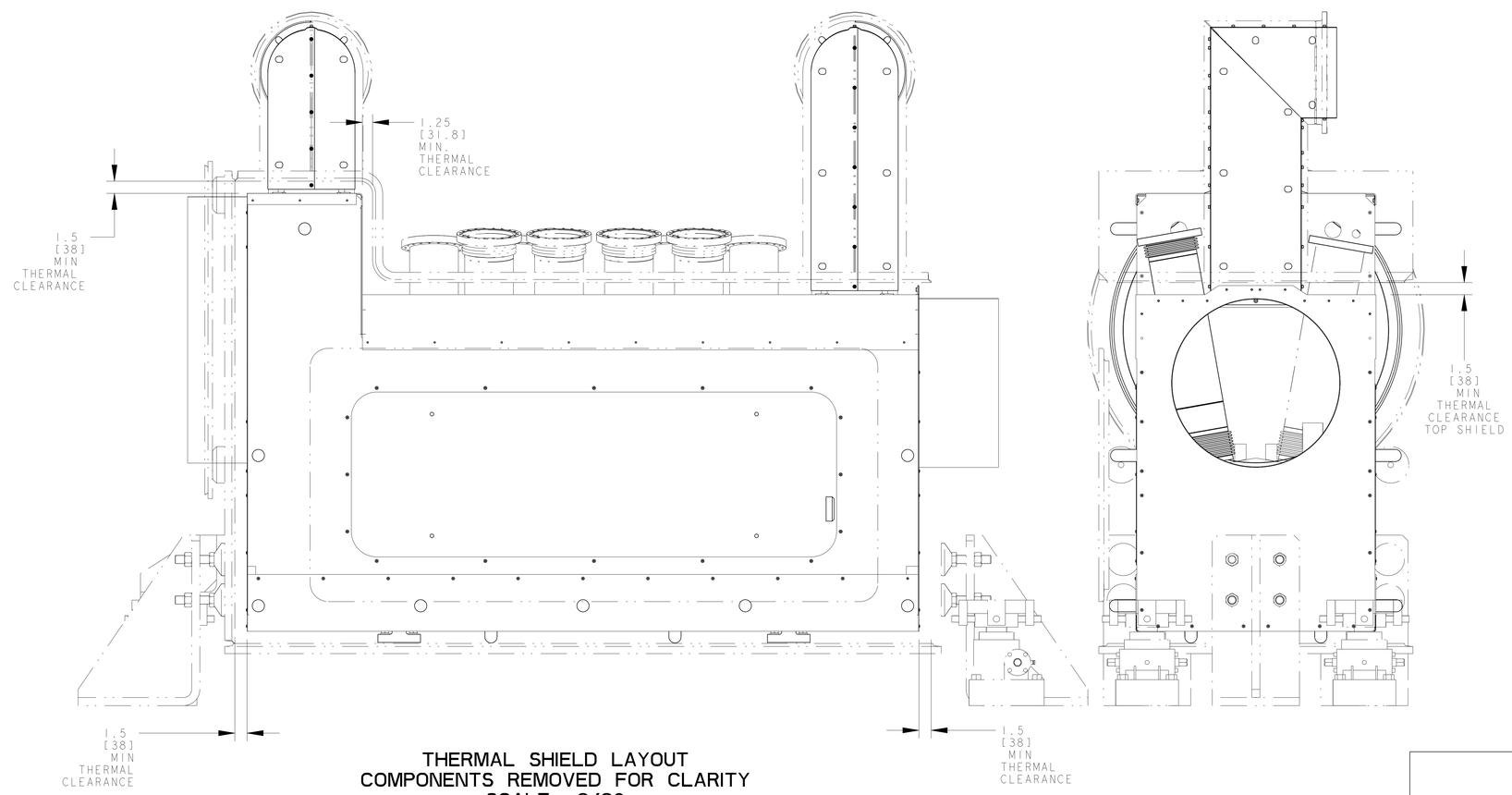

THERMAL SHIELD LAYOUT
COMPONENTS REMOVED FOR CLARITY
SCALE 3/20

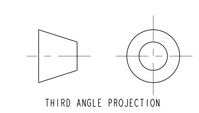

ERNEST ORLANDO LAWRENCE
BERKELEY NATIONAL LABORATORY
UNIVERSITY OF CALIFORNIA - BERKELEY

LHC IR FEEDBOX
MAJOR ASSEMBLY
DFBXF (IP5,RIGHT) FEED BOX ASSY, IP5 (RIGHT)

MICROFILMED:	DWG. TYPE	SHOWN ON	SCALE: 13/100	DO NOT SCALE PRINTS
	ASSEM	-	SHEET 9 OF 11	
PATENT CLEAR:	DESIGN ACCT. NO.	CATEGORY CODE	DWG. NO.	SIZE / REV.
	Z5LCE2	LH2001	24C3956	C

DWG. NO. 24C3956 SIZE C REV. 9

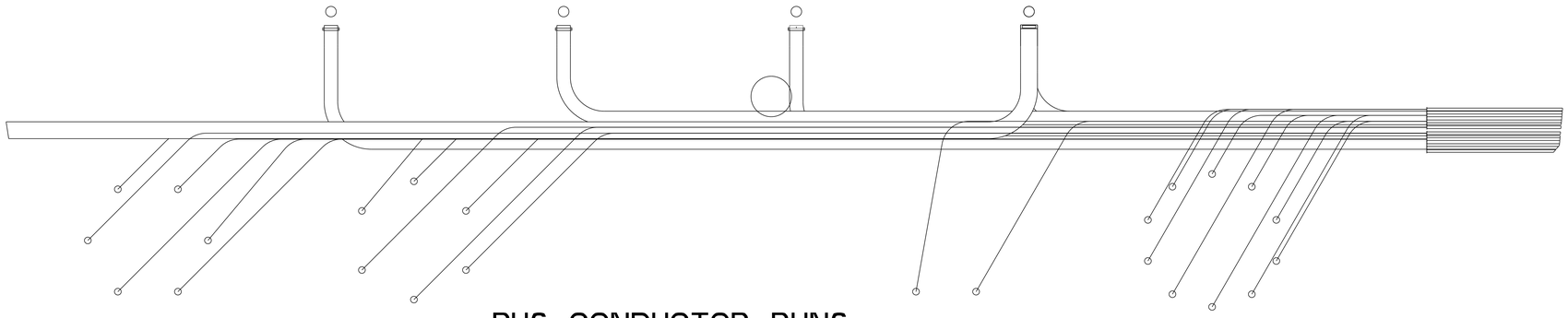

BUS CONDUCTOR RUNS

DETAIL N
SCALE 1/2

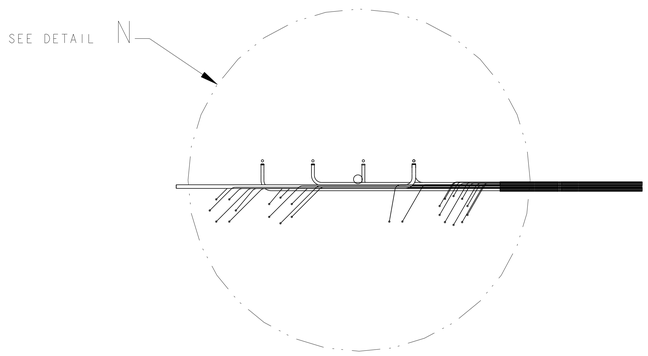

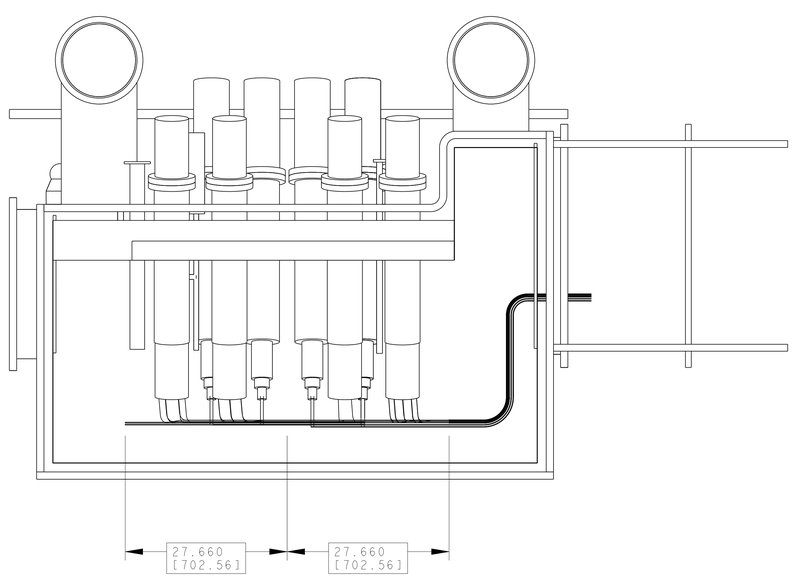

SCALE 1/10

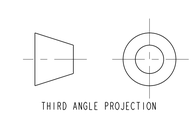

THIRD ANGLE PROJECTION

ERNEST ORLANDO LAWRENCE
BERKELEY NATIONAL LABORATORY
UNIVERSITY OF CALIFORNIA - BERKELEY

LHC IR FEEDBOX
MAJOR ASSEMBLY
DFBXF (IP5,RIGHT) FEED BOX ASSY, IP5 (RIGHT)

MICROFILMED:	DWG. TYPE	SHOWN ON	SCALE: 13/100	DO NOT SCALE PRINTS
	ASSEM	-	SHEET 10 OF 11	
PATENT CLEAR:	DESIGN ACCT. NO.	CATEGORY CODE	DWG. NO.	SIZE / REV.
	Z5LCE2	LH2001	24C3956	C

DWG. NO. 24C3956 SIZE C REV. 10

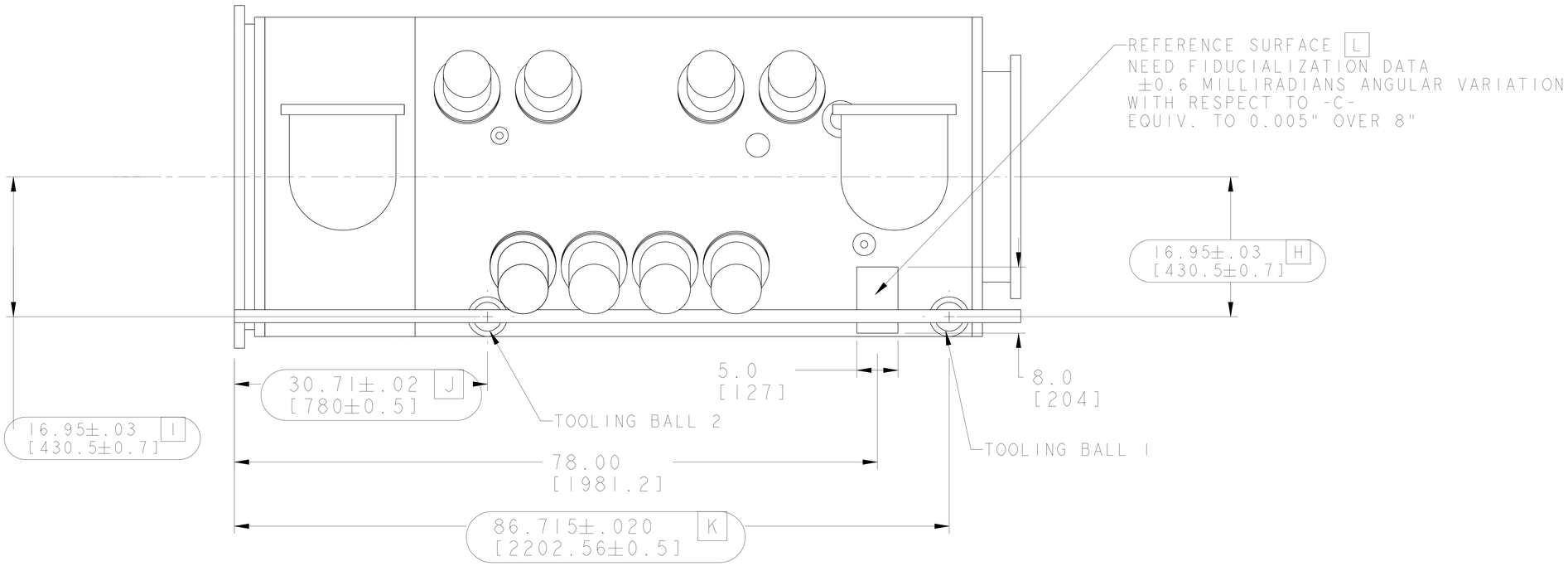

SCALE 17/100

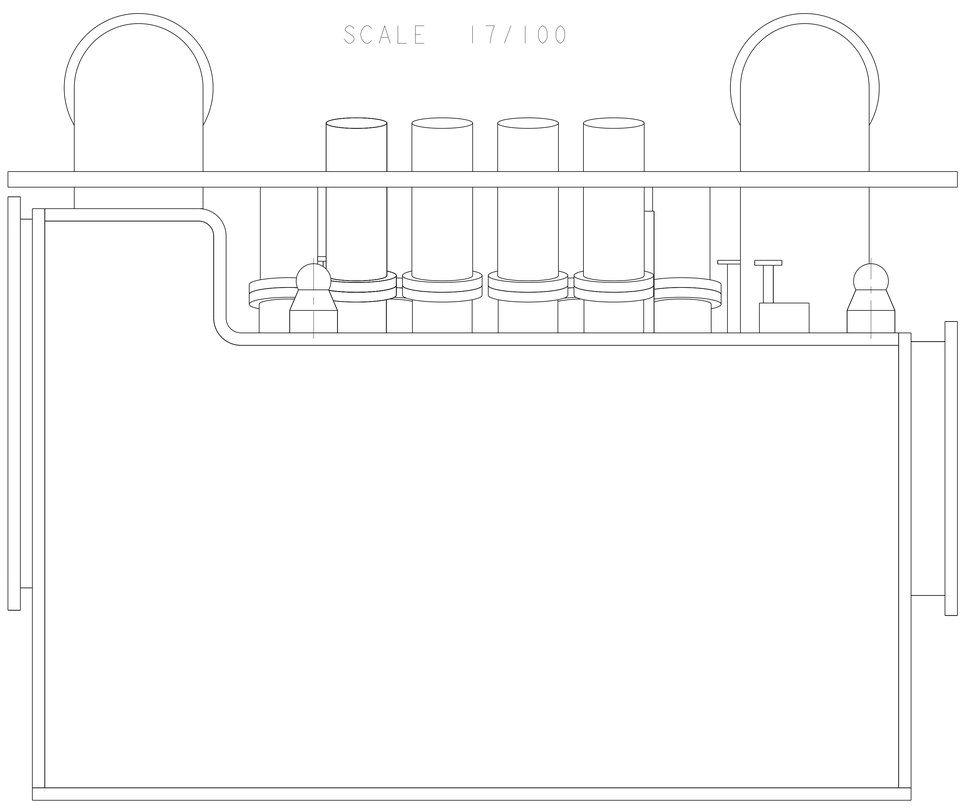

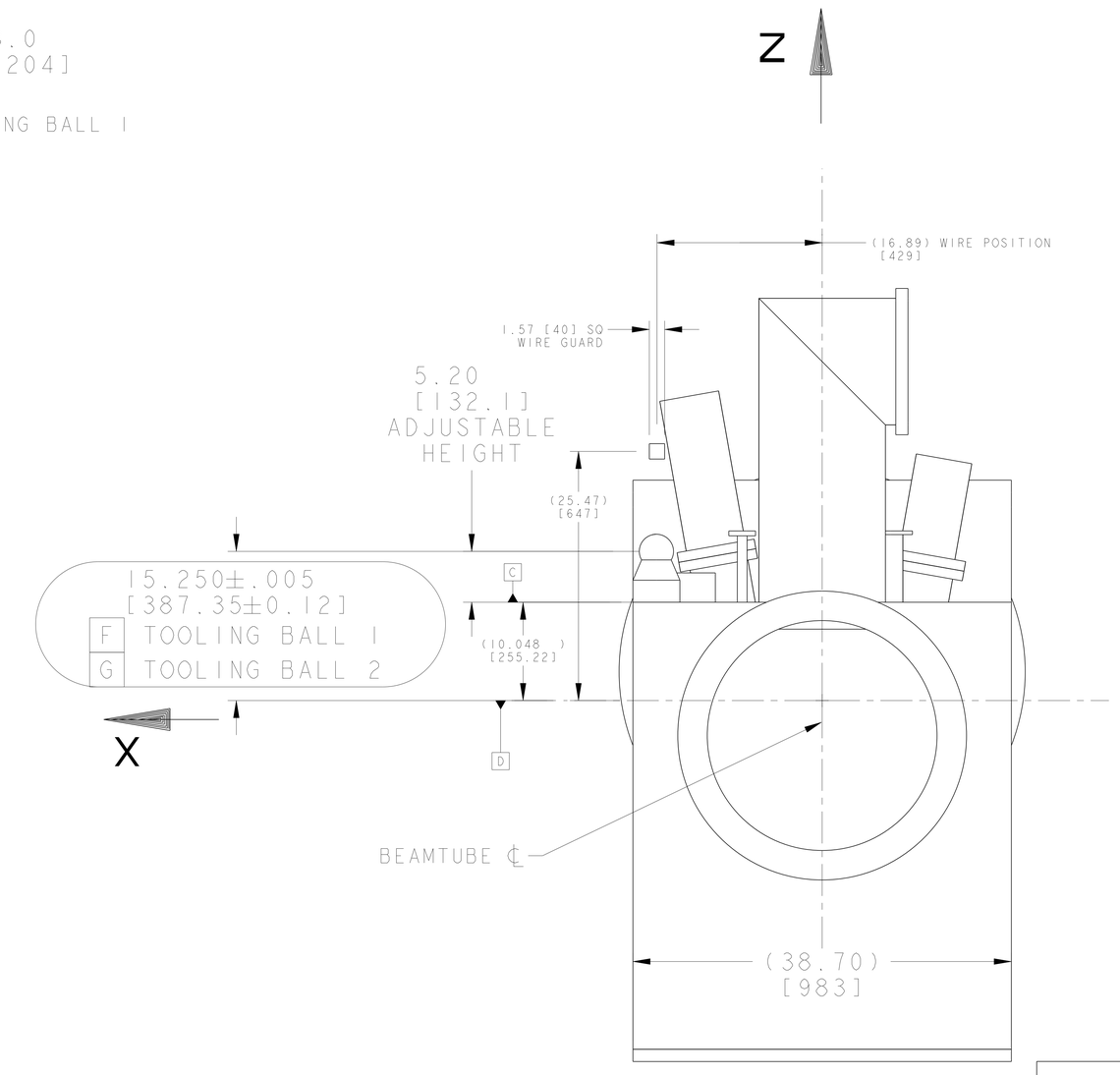

FIDUCIAL LAYOUT INFORMATION

THIRD ANGLE PROJECTION

ERNEST ORLANDO LAWRENCE
BERKELEY NATIONAL LABORATORY
UNIVERSITY OF CALIFORNIA - BERKELEY

LHC IR FEEDBOX
MAJOR ASSEMBLY
DFBXF (IP5,RIGHT) FEED BOX ASSY, IP5 (RIGHT)

MICROFILMED:	DWG. TYPE	SHOWN ON	SCALE: 1:3/100	DO NOT SCALE PRINTS
	ASSEM	-	SHEET 11 OF 11	
PATENT CLEAR:	DESIGN ACCT. NO.	CATEGORY CODE	DWG. NO.	SIZE / REV.
	Z5LCE2	LH2001	24C3956	C

DWG. NO. 24C3956 SIZE/REV. C 11