NOTE:
1. DERIVED FROM SPECIFICATION LHC-DFBX-ES-100
2. DERIVED FROM SPECIFICATION LHC-DFBX-ES-200
3. DERIVED FROM SPECIFICATION LHC-DFBX-ES-210
4. DERIVED FROM SPECIFICATION LHC-DFBX-ES-240
5. DERIVED FROM SPECIFICATION LHC-DFBX-ES-260
6. DERIVED FROM SPECIFICATION LHC-DFBX-ES-250
7. DERIVED FROM SPECIFICATION LHC-DFBX-ES-230
8. FILL MOUNTING HOLES WITH EPOXY
9. HTS CURRENT LEAD IN SPECIFICATION M923B

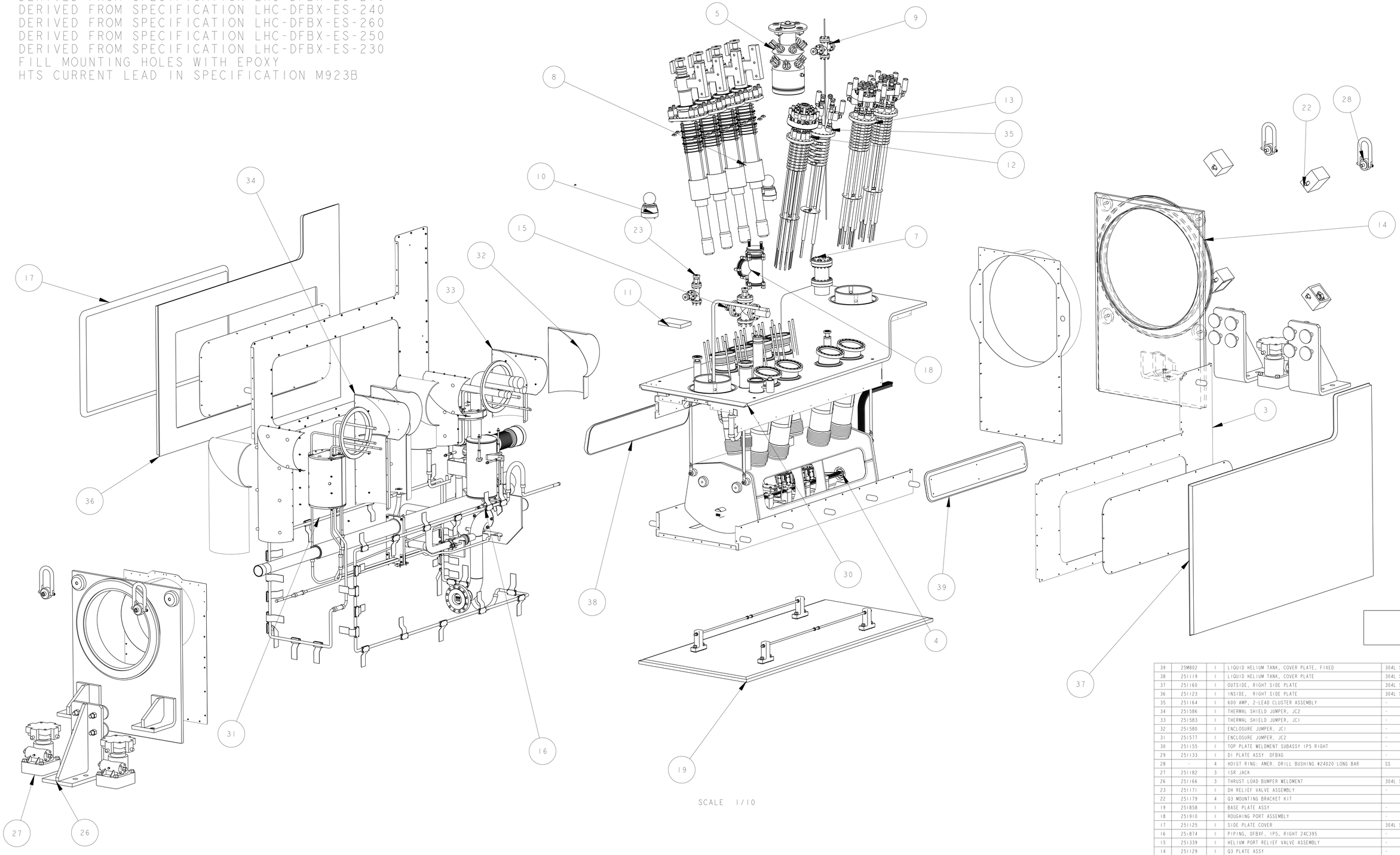

SCALE 1/10

ITEM	PART NO.	REQD	DESCRIPTION	MATERIAL
39	25M802	1	LIQUID HELIUM TANK, COVER PLATE, FIXED	304L SS
38	251119	1	LIQUID HELIUM TANK, COVER PLATE	304L SS
37	251160	1	OUTSIDE, RIGHT SIDE PLATE	304L SS
36	251123	1	INSIDE, RIGHT SIDE PLATE	304L SS
35	251164	1	600 AMP, 2-LEAD CLUSTER ASSEMBLY	-
34	251586	1	THERMAL SHIELD JUMPER, JC2	-
33	251583	1	THERMAL SHIELD JUMPER, JC1	-
32	251580	1	ENCLOSURE JUMPER, JC1	-
31	251577	1	ENCLOSURE JUMPER, JC2	-
30	251155	1	TOP PLATE WELDMENT SUBASSY 1P5 RIGHT	-
29	251133	1	DI PLATE ASSY DFBXG	-
28	-	4	HOIST RING: AMER. DRILL BUSHING #24020 LONG BAR	SS
27	251182	3	ISR JACK	
26	251166	3	THRUST LOAD BUMPER WELDMENT	304L SS
23	251171	1	DH RELIEF VALVE ASSEMBLY	-
22	251179	4	Q3 MOUNTING BRACKET KIT	
19	251858	1	BASE PLATE ASSY	-
18	251910	1	ROUGHING PORT ASSEMBLY	-
17	251125	1	SIDE PLATE COVER	304L SS
16	251874	1	PIPING, DFBXF, 1P5, RIGHT 24C395	-
15	251339	1	HELIUM PORT RELIEF VALVE ASSEMBLY	-
14	251129	1	Q3 PLATE ASSY	-
13	24C353	2	600 AMP,6 LEAD VAPOR COOLED ASSY	-
12	24C322	1	120 AMP VC LEAD MOUNTING ASSY	-
11	25M820	1	ALIGNMENT PLATE	-
10	251868	2	TOOLING BALL, LHCGIMSA00092	-
9	251162	1	LHE DIAGNOSTIC ASSY	-
8	251156	6	PIRELLI HTS LEAD KIT	-
7	251851	1	HELIUM GUARD ASSEMBLY	-
5	251831	1	LQX DIAGONSTIC ASSEMBLY	-
4	251864	1	BUS DUCT ASSEMBLY	-
3	251079	1	THERMAL SHIELD ASSY, DFBXG	-

DWG. NO. 24C3956 SHEET NO. 1 SIZE B

11. SOLDER JOINT USING SN60PB40 SOLDER; ROSIN FLUX, USE SPLICE PLATE IF REQUIRED
12. CLOSEOUT WELD PROCEDURE TO BE APPROVED BY LBNL
    DISTORTION CONTROL IS ESSENTIAL, ROOT PASS GTAW, COVER PASSES GMAW, SMAW, FCMAW.
13. WELD PROCEDURE TO BE APPROVED BY LBNL, USE GTAW PROCESS
14. BELLOWS TO BE WITHIN 0.03" OF FREE CONFIGURATION AFTER CLOSEOUT WELDING
15. DIMENSIONS FROM DFBX FLANGE FACE ON DI SIDE, ADD -2367.2 MM TO OBTAIN POSITION RELEATIVE TO DFBX COORDINATE SYSTEM
16. SHIM TANK SUPPORTS TO LIMIT STATIC DEFLECTION OF THE LOWER TANK SUPPORT RODS TO LESS THAN 0.25"
17. DIMENSIONS SHOW IN INSPECTION OVAL ARE REFERENCED IN THE FABRICATION TRAVELER
18. COPPER STRAP ATTACHED TO THE THERMAL ANCHORS DO NOT HAVE TO BE EVENLY SPACED.
19. ALL DIMENSIONS GIVEN AT ROOM TEMPERATURE

THIRD ANGLE PROJECTION

REV	DWG	CHK	ZONE	DATE	CHANGES
A	JDR	DPO		12/12/02	INITIAL RELEASE
A	JDR	DPO		10/03/03	PRELIMINARY RELEASE

UNLESS OTHERWISE SPECIFIED
TOLERANCES: X.X ± 0.1 | FRAC. ± 1/64 | X.XX ± 0.03 | Angles ± 1.00° | X.XXX ± 0.010 | FINISH 125 µin
DO NOT SCALE PRINT
THREADS ARE CLASS 2
CHAMFER ENDS OF ALL SCREW THEADS 30°
CUT ROUND, 1.5 THREAD RELIEF ON MACHINED THREADS
BREAK EDGES .016 MAX. ON MACHINED WORK
REMOVE BURRS, WELD SPLATTER & LOOSE SCALE
IN ACCORDANCE WITH ASME Y14.5M & BAE.1

SHOP ORDERS
ACCT. NO.
REQD NO.
REL TO
SURFACE TREATMT.
HEAT METHOD
PROJECT NUMBER
PROJECT NAME: N/A
DWG BY: M J KNOLLS — DATE 02-Nov-01
CHK BY: Jon Zbasnik — DATE 03-OCT-02
APP BY: Jon Zbasnik — DATE 03-OCT-02

ERNEST ORLANDO LAWRENCE BERKELEY NATIONAL LABORATORY
UNIVERSITY OF CALIFORNIA - BERKELEY

LHC IR FEEDBOX
MAJOR ASSEMBLY
DFBXF (1P5,RIGHT) FEED BOX ASSY, 1P5 (RIGHT)

MICROFILMED:
DWG. TYPE: ASSEM
SHOWN ON: -
SCALE: 1:3/100
DO NOT SCALE PRINTS
SHEET 1 OF 11
PATENT CLEAR:
DESIGN ACCT. NO.: Z5LCE2
CATEGORY CODE: LH2001
DWG. NO.: 24C3956
SIZE: B
REV.

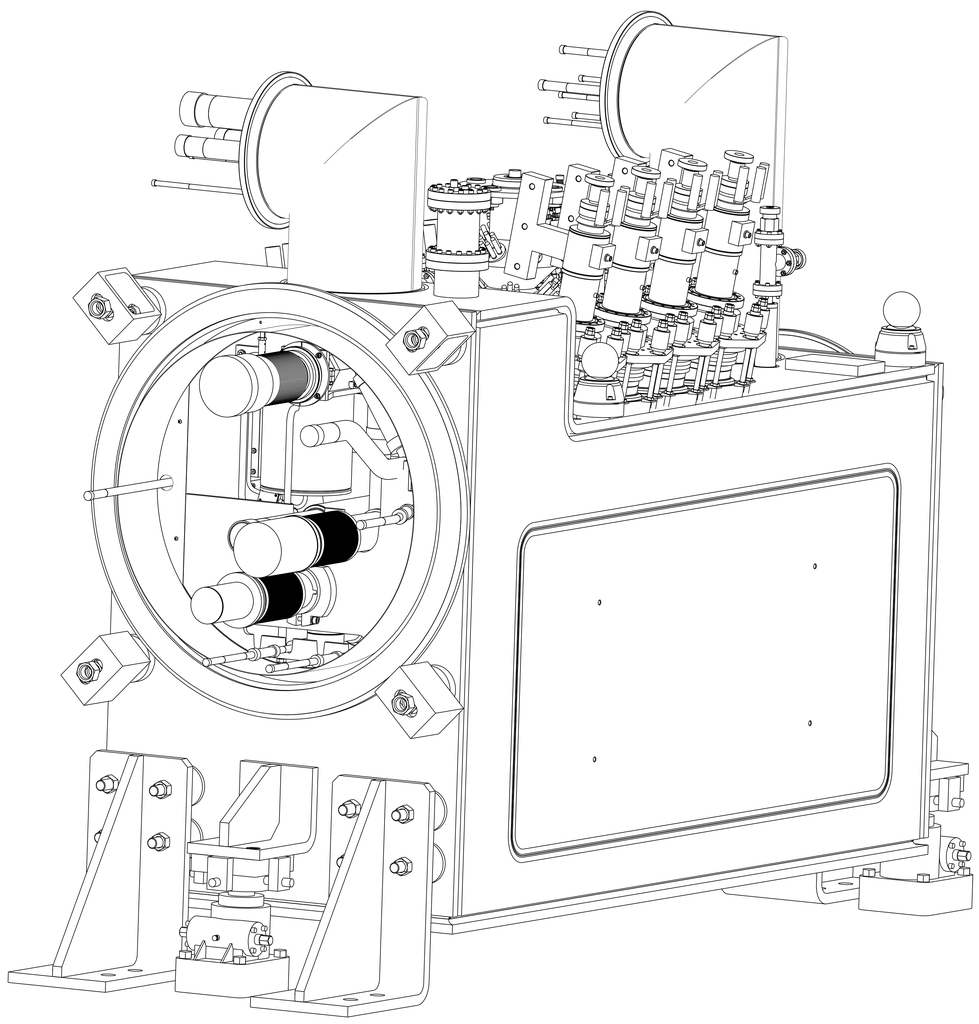

Q3 END

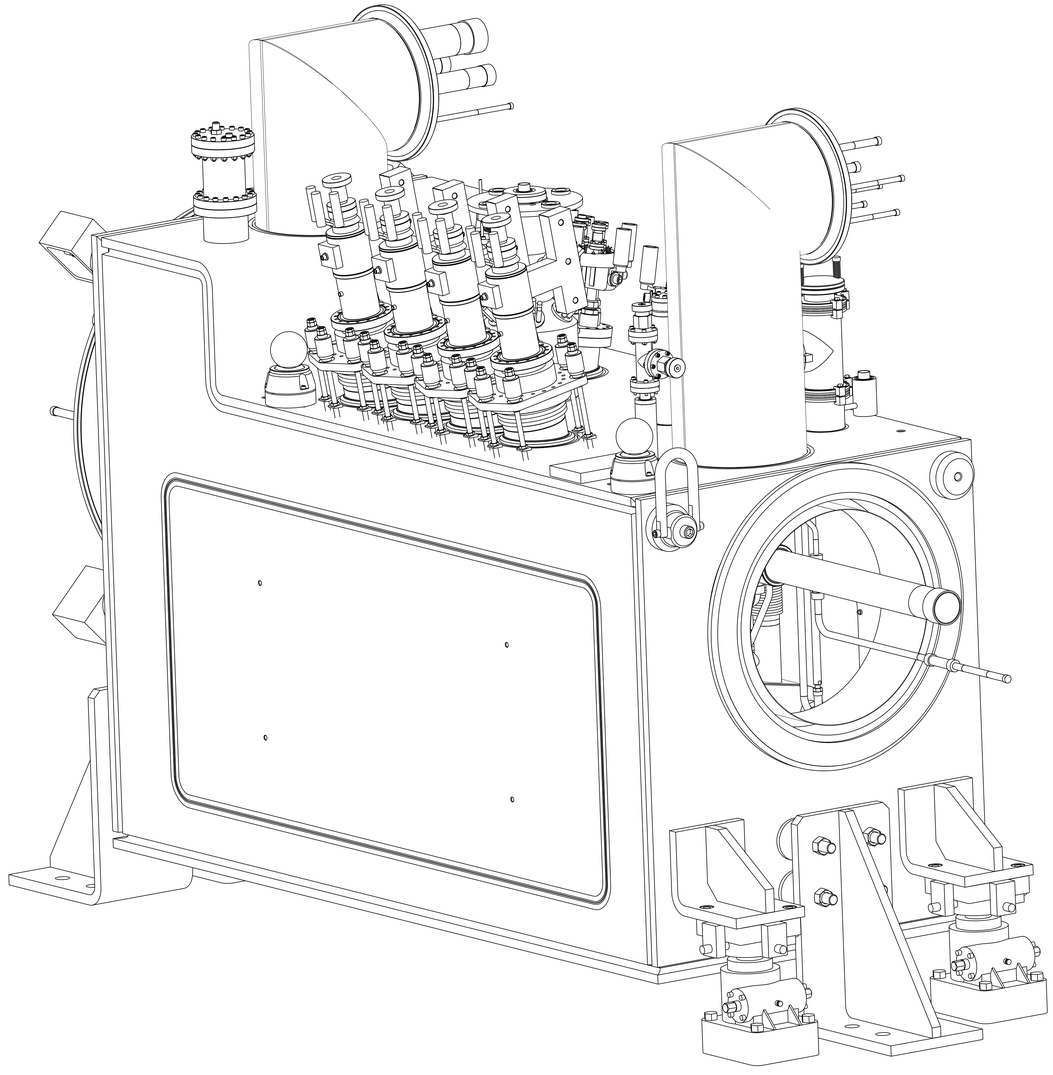

D1 END

DFBXF, IP5 (RIGHT)

THIRD ANGLE PROJECTION

ERNEST ORLANDO LAWRENCE
BERKELEY NATIONAL LABORATORY
UNIVERSITY OF CALIFORNIA - BERKELEY

LHC IR FEEDBOX
MAJOR ASSEMBLY
DFBXF (IP5,RIGHT) FEED BOX ASSY, IP5 (RIGHT)

MICROFILMED:	DWG. TYPE: ASSEM	SHOWN ON: -	SCALE: 9/50 DO NOT SCALE PRINTS
			SHEET 2 OF 11
PATENT CLEAR:	DESIGN ACCT. NO.: Z5LCE2	CATEGORY CODE: LH2001	DWG. NO.: 24C3956 SIZE: B REV.

DWG. NO. 24C3956 SIZE B SHT 2

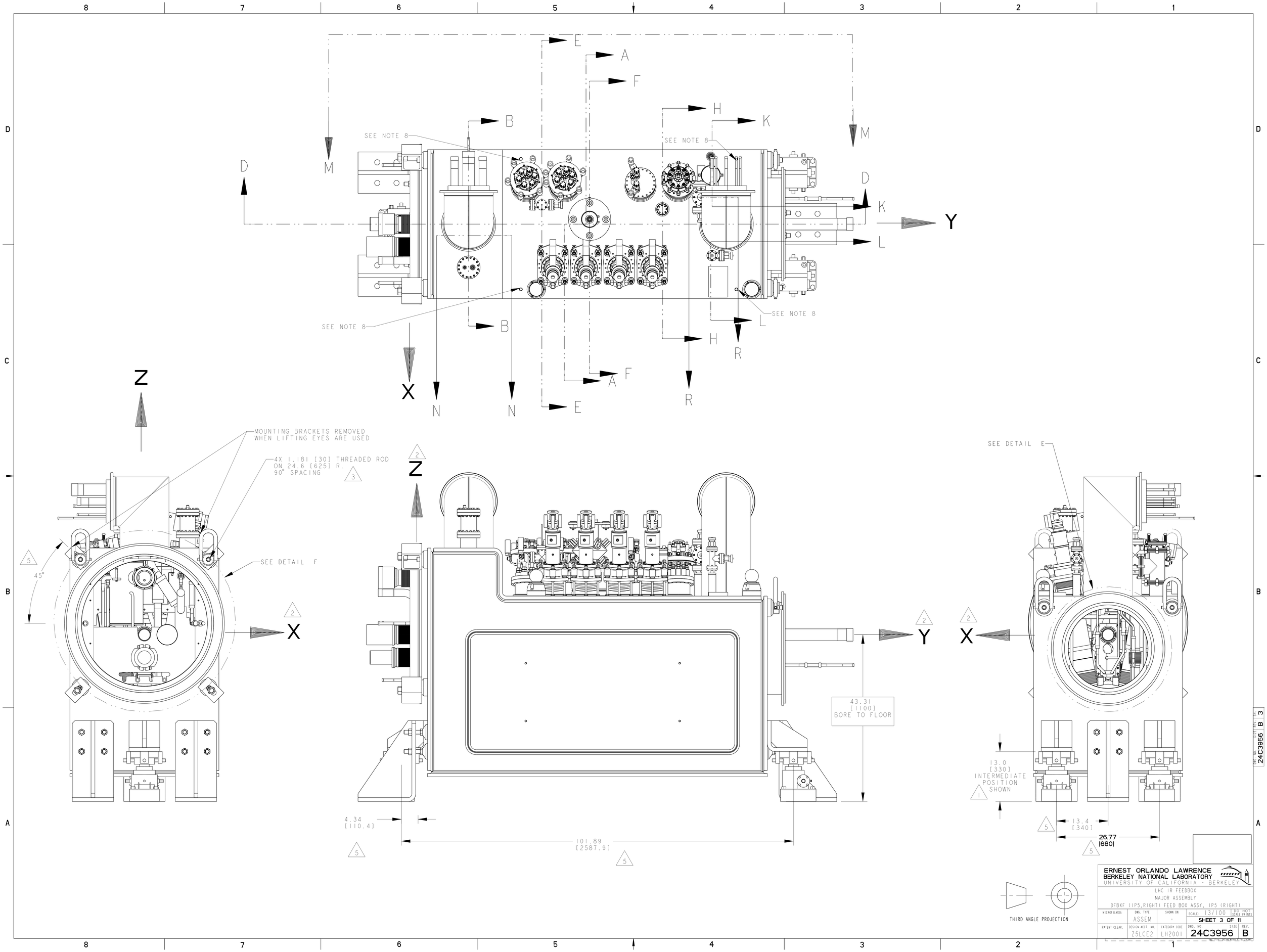

ERNEST ORLANDO LAWRENCE BERKELEY NATIONAL LABORATORY
UNIVERSITY OF CALIFORNIA - BERKELEY

LHC IR FEEDBOX
MAJOR ASSEMBLY
DFBXF (IP5,RIGHT) FEED BOX ASSY, IP5 (RIGHT)

MICROFILMED:	DWG. TYPE	SHOWN ON	SCALE: 13/100	DO NOT SCALE PRINTS
	ASSEM	-	SHEET 3 OF 11	
PATENT CLEAR:	DESIGN ACCT. NO.	CATEGORY CODE	DWG. NO.	SIZE / REV.
	Z5LCE2	LH2001	24C3956	B

DWG. NO. 24C3956 SIZE B REV. 3

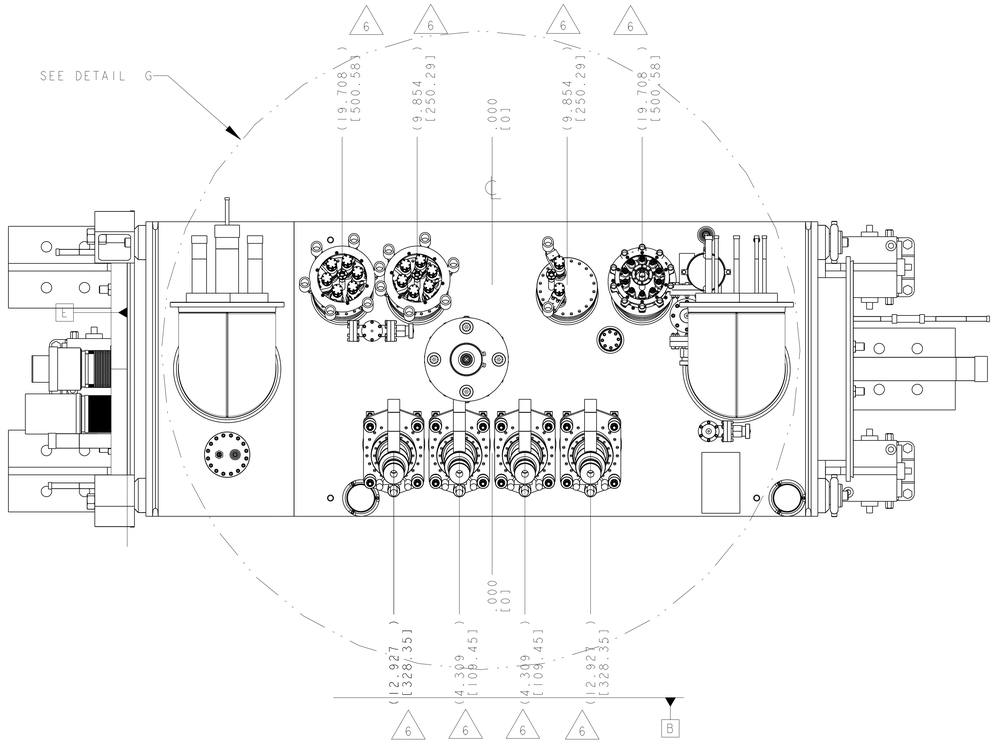

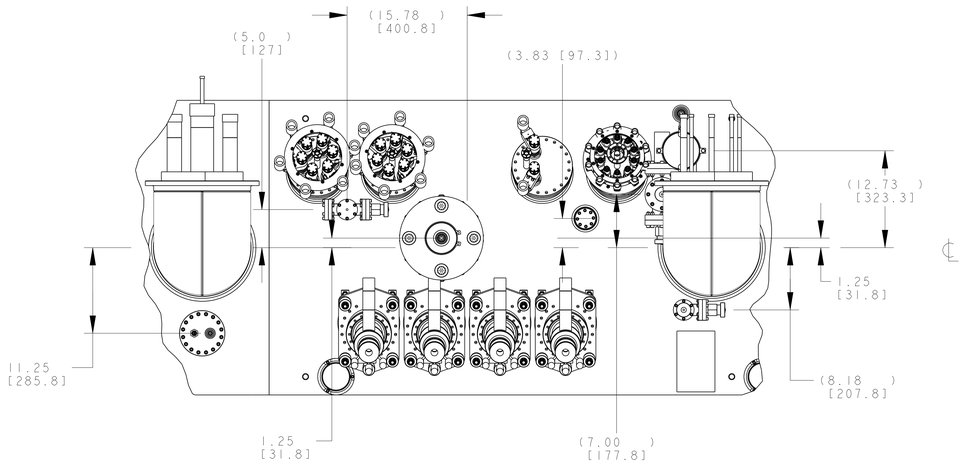

DETAIL G
SCALE 13/100

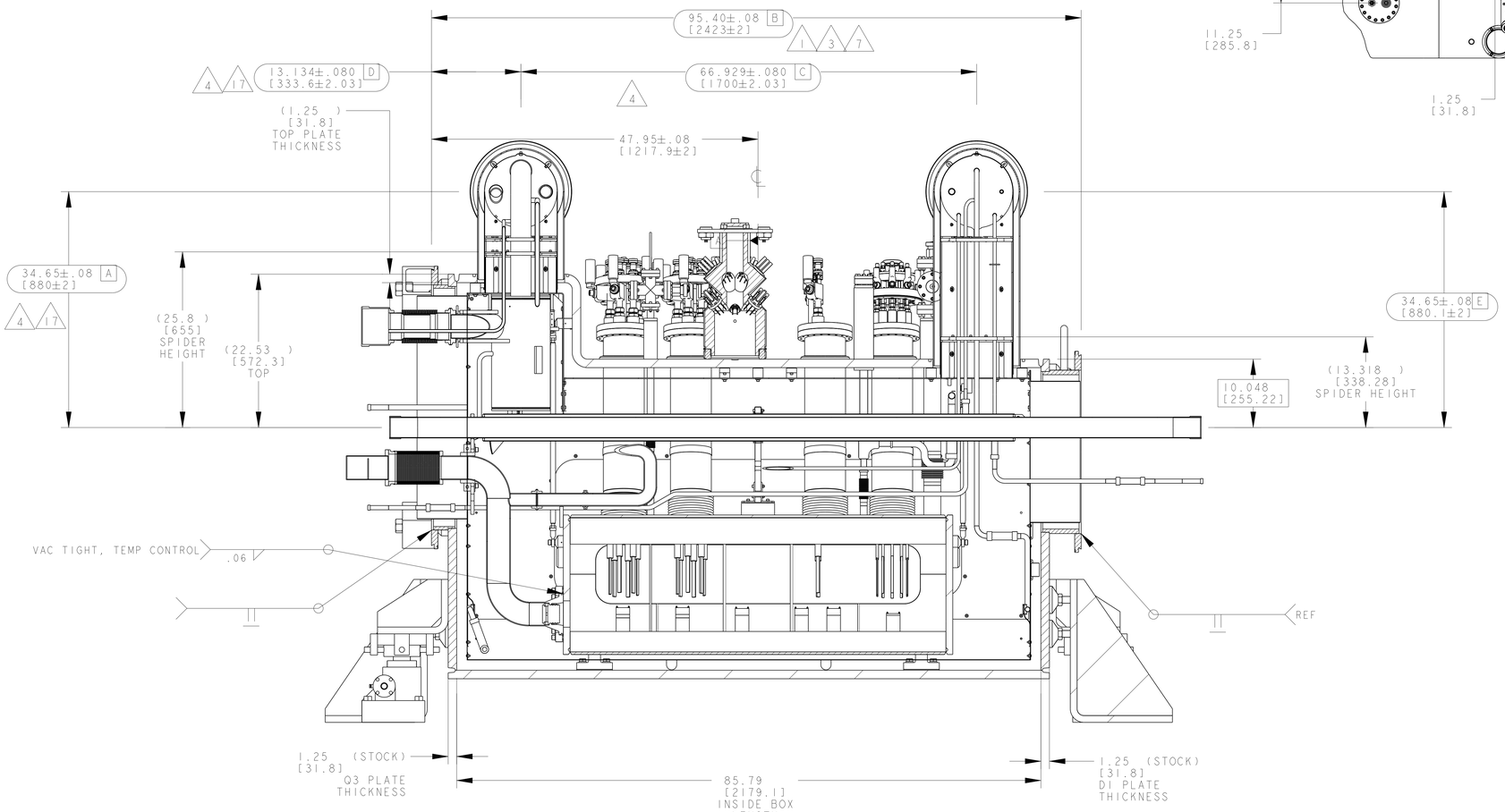

SECTION D - D
SCALE 13/100

THIRD ANGLE PROJECTION

ERNEST ORLANDO LAWRENCE BERKELEY NATIONAL LABORATORY	
UNIVERSITY OF CALIFORNIA - BERKELEY	
LHC IR FEEDBOX	
MAJOR ASSEMBLY	
DFBXF (IP5,RIGHT) FEED BOX ASSY, IP5 (RIGHT)	
MICROFILMED:	DWG. TYPE: ASSEM; SHOWN ON: -; SCALE: 13/100 DO NOT SCALE PRINTS; SHEET 4 OF 11
PATENT CLEAR:	DESIGN ACCT. NO.: Z5LCE2; CATEGORY CODE: LH2001; DWG. NO.: 24C3956; SIZE: B; REV.

DWG. NO. 24C3956 SIZE B SHT 4

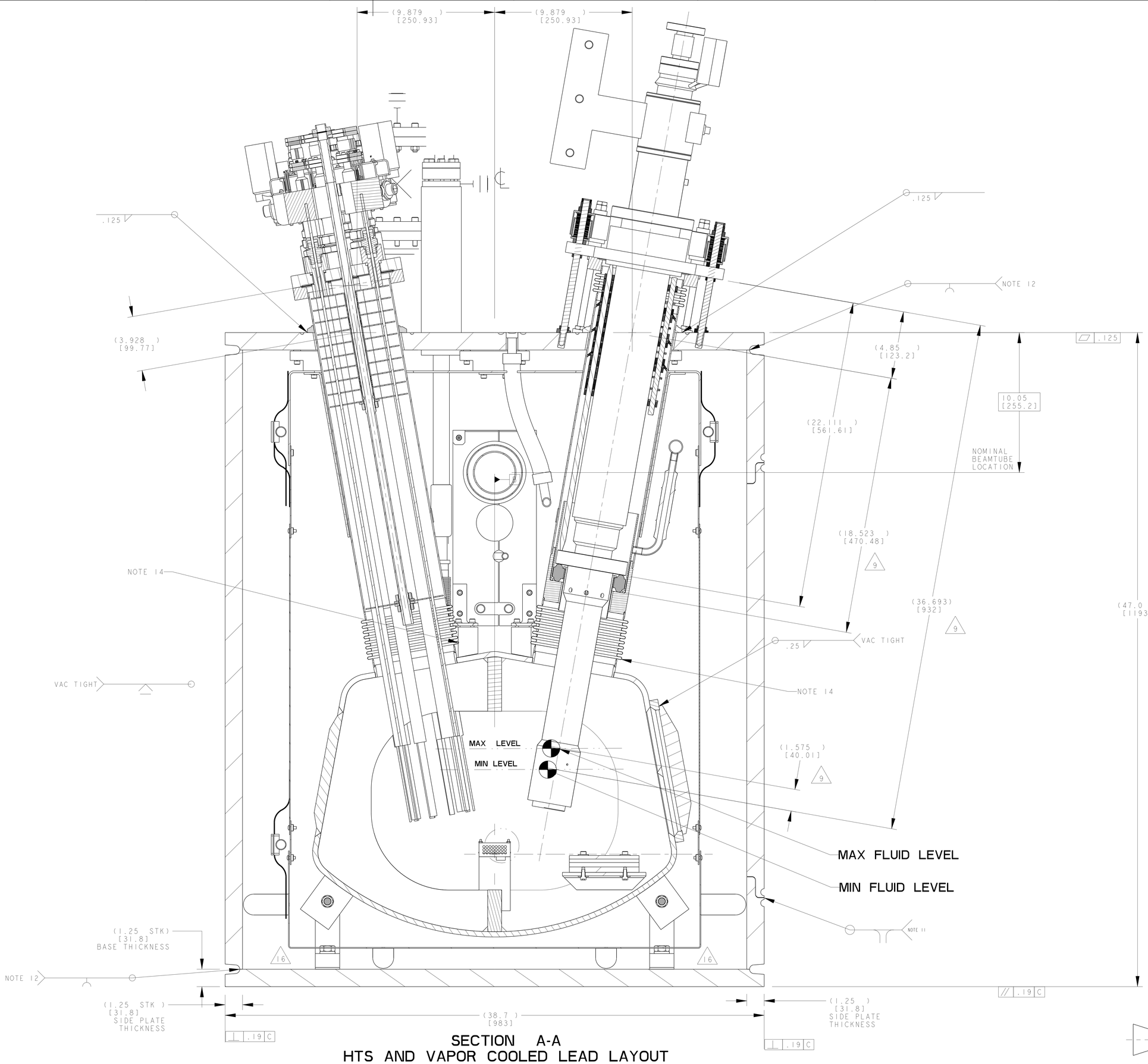

SECTION A-A
HTS AND VAPOR COOLED LEAD LAYOUT
SCALE 2/5

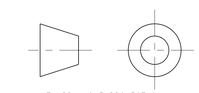

THIRD ANGLE PROJECTION

ERNEST ORLANDO LAWRENCE BERKELEY NATIONAL LABORATORY
UNIVERSITY OF CALIFORNIA - BERKELEY

LHC IR FEEDBOX
MAJOR ASSEMBLY
DFBXF (IP5,RIGHT) FEED BOX ASSY, IP5 (RIGHT)

MICROFILMED:	DWG. TYPE	SHOWN ON	SCALE: 13/100	DO NOT SCALE PRINTS
	ASSEM	-	SHEET 5 OF 11	
PATENT CLEAR:	DESIGN ACCT. NO.	CATEGORY CODE	DWG. NO.	SIZE / REV.
	Z5LCE2	LH2001	24C3956	B

DWG. NO. 24C3956 SIZE B REV. 5

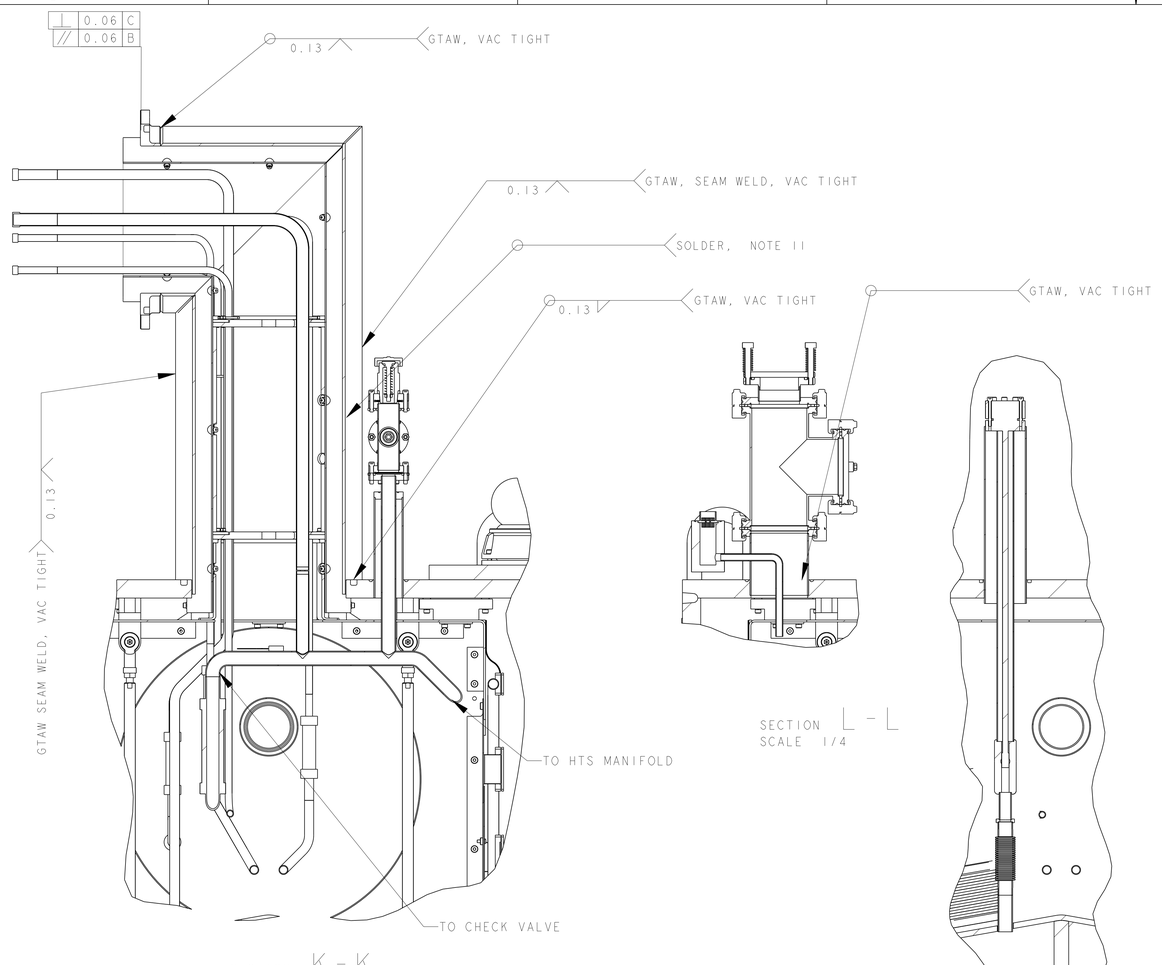

SECTION K - K
SCALE 1/4

SECTION L - L
SCALE 1/4

SECTION H - H
SCALE 1/4

SECTION F - F
SCALE 1/4

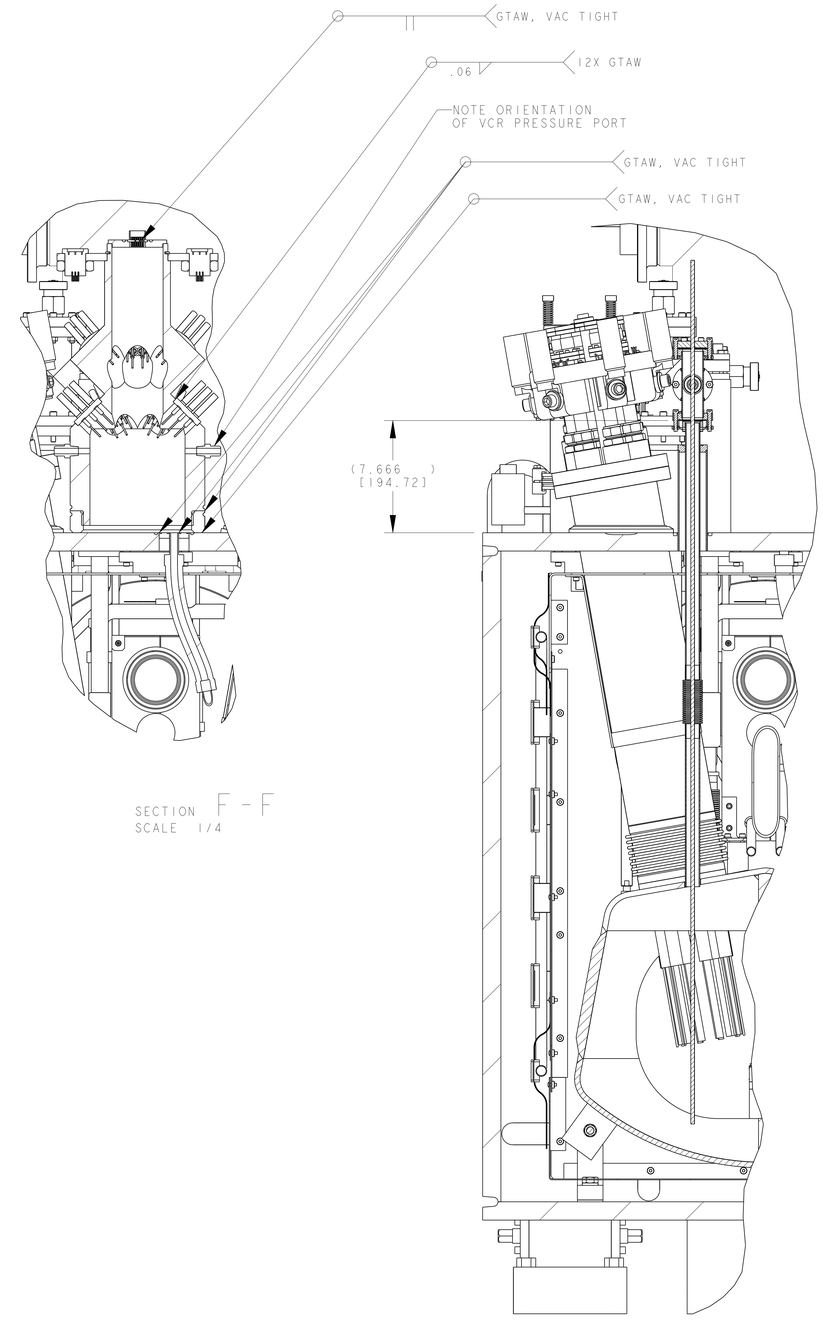

SECTION E - E
SCALE 1/4

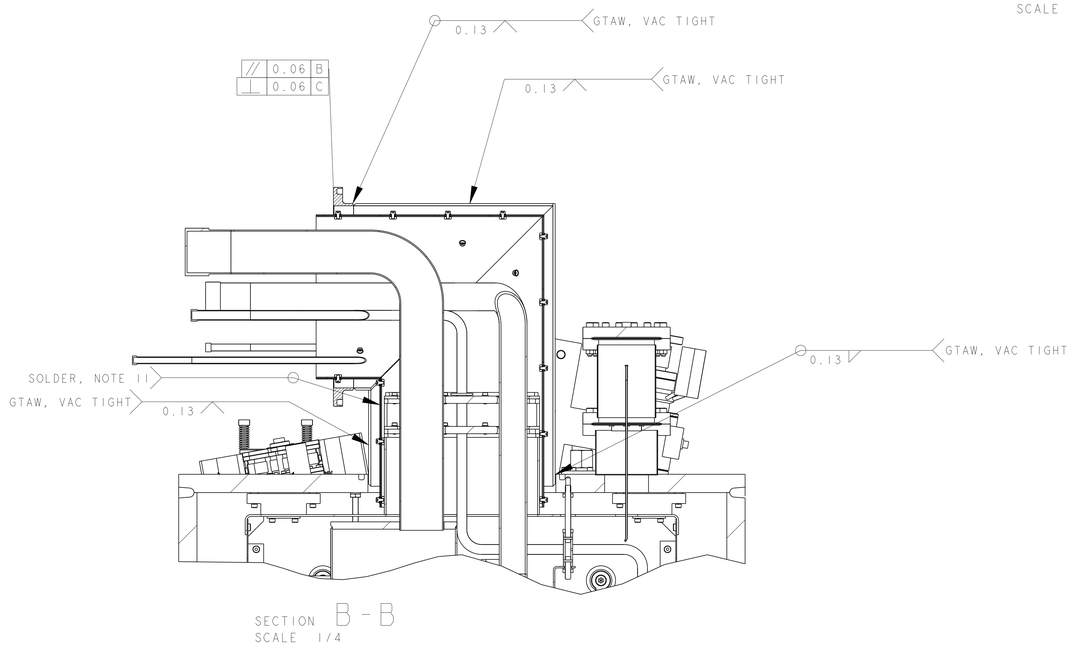

SECTION B - B
SCALE 1/4

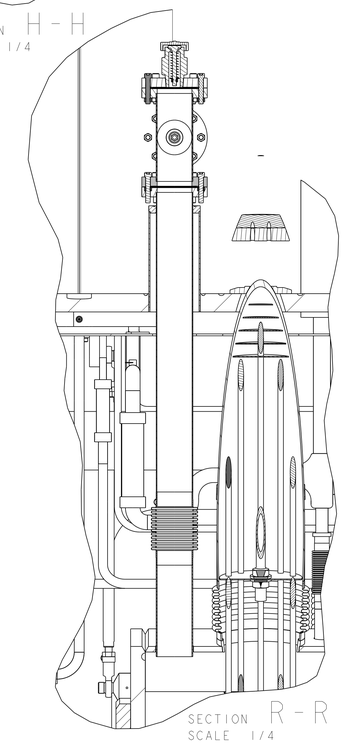

SECTION R - R
SCALE 1/4

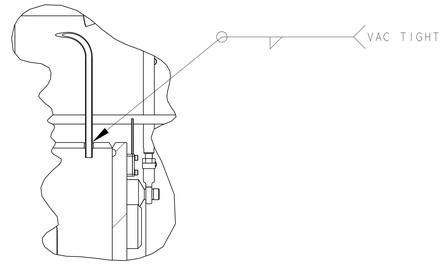

SECTION N - N
SCALE 1/4

ERNEST ORLANDO LAWRENCE
BERKELEY NATIONAL LABORATORY
UNIVERSITY OF CALIFORNIA - BERKELEY

LHC IR FEEDBOX
MAJOR ASSEMBLY
DFBXF (IP5,RIGHT) FEED BOX ASSY, IP5 (RIGHT)

MICROFILMED:	DWG. TYPE: ASSEM	SHOWN ON: -	SCALE: 1:1/100 DO NOT SCALE PRINTS
			SHEET 6 OF 11
PATENT CLEAR:	DESIGN ACCT. NO.: Z5LCE2	CATEGORY CODE: LH2001	DWG. NO.: 24C3956 SIZE: B REV.

DWG. NO. 24C3956 SIZE | REV. | SH. B | 6

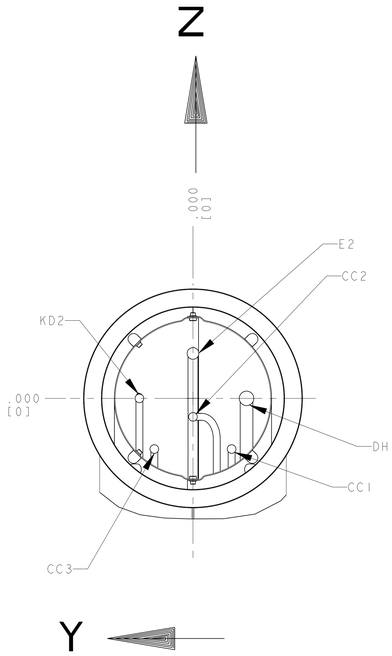

		DIM'S MEASURED FROM FLANGE CENTER	
PIPE	X	Y ±0.08	Z ±0.08
E2	-14.45±.08 [367±2]	0	3.07 [78]
DH	-14.45±.08 [367±2]	-3.66 [93]	0
KD2	-14.45±.08 [367±2]	3.66 [93]]	0
CC2	-14.45±.08 [367±2]	0	-1.26 [32]
CC1	-14.45±.08 [367±2]	-2.64 [67]	-3.46 [88]
CC3	-14.45±.08 [367±2]	2.64 [67]	-3.46 [88]

4

DETAIL D
JC2 / QQSD
DIMENSIONAL TOLERANCE ± 0.08
ORIENTATION OPPOSITE OF SPECIFICATION 240
SCALE 1/4

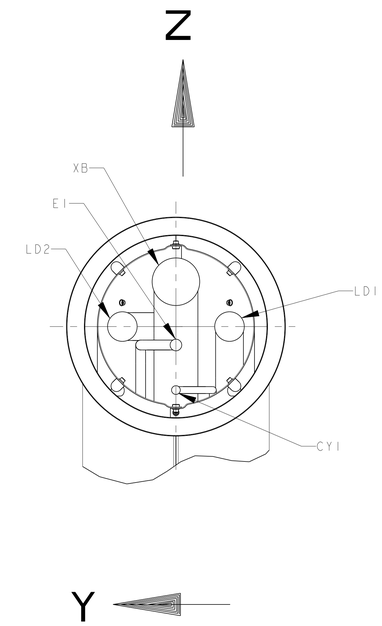

		DIM'S MEASURED FROM FLANGE CENTER	
PIPE	X	Y ±0.08	Z ±0.08
XB	-14.45±.08 [367±2]	0	3.07 [78]
LD2	-14.45±.08 [367±2]	3.66 [93]	0
LD1	-14.45±.08 [367±2]	-3.66 [93]	0
E1	-14.45±.08 [367±2]	0	-1.26 [32]
CY1	-14.45±.08 [367±2]	0	-4.33 [110]

4

DETAIL C
JC1 / QQSC
DIMENSIONAL TOLERANCE ± 0.08
ORIENTATION OPPOSITE OF SPECIFICATION 240
SCALE 1/4

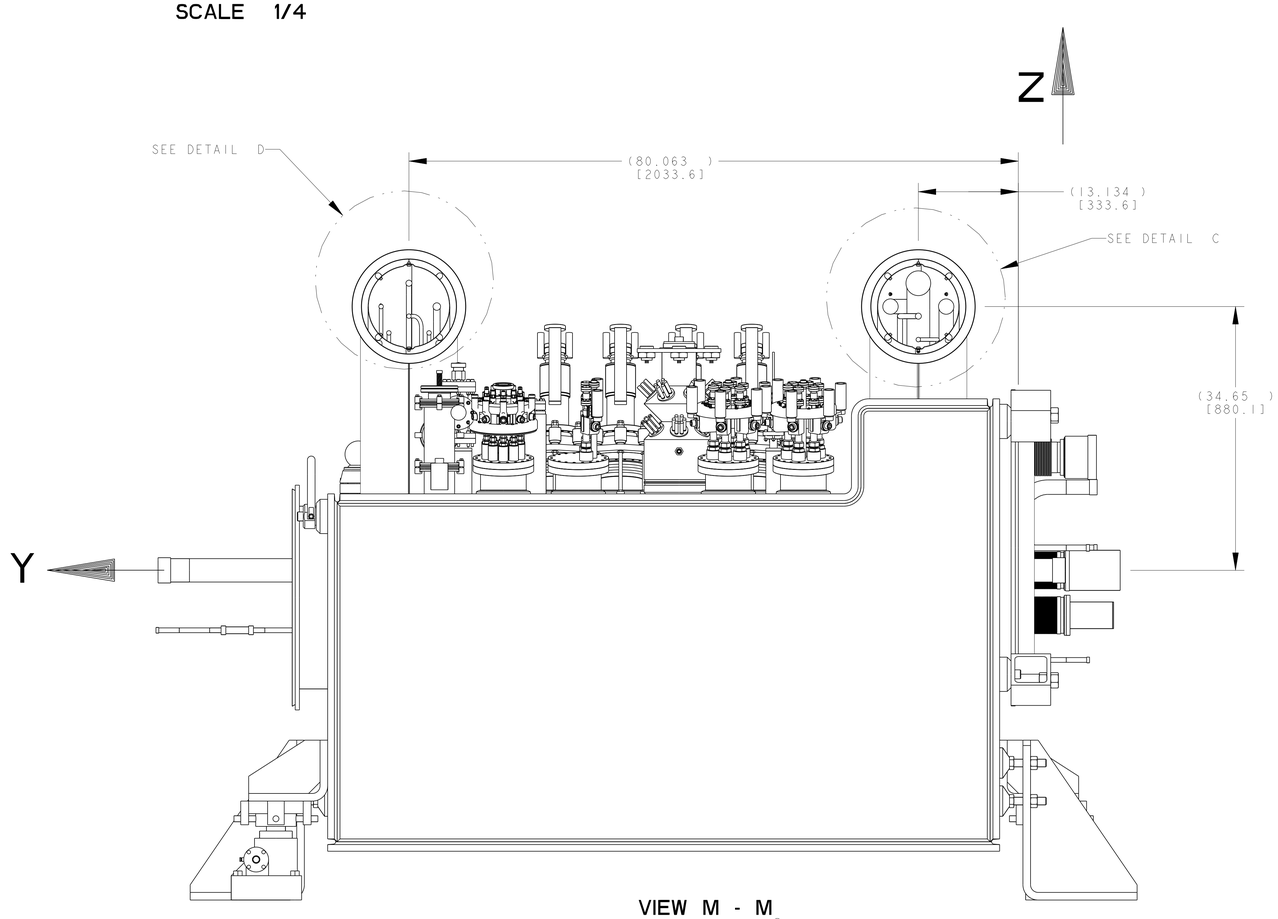

VIEW M - M
ROTATED 180°

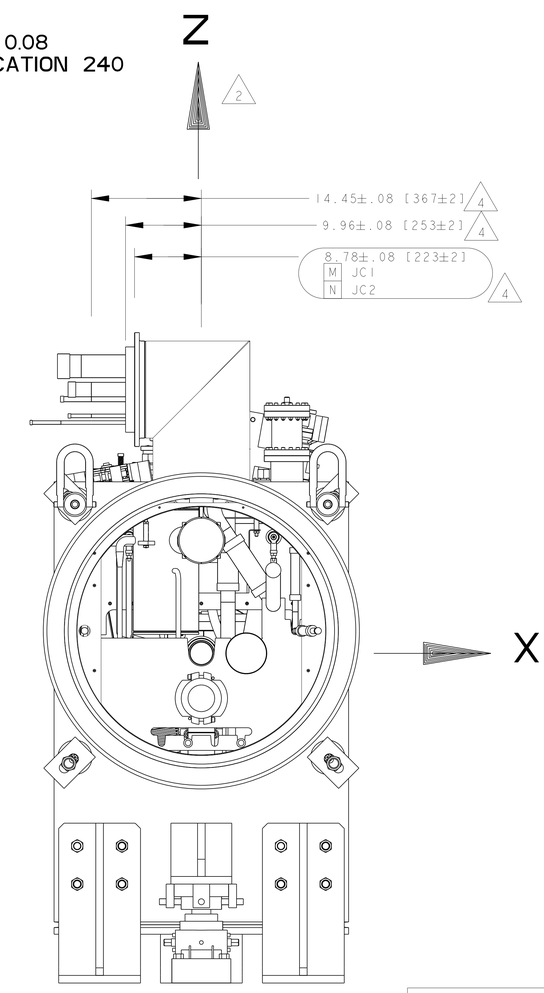

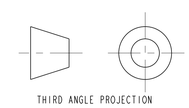

THIRD ANGLE PROJECTION

ERNEST ORLANDO LAWRENCE
BERKELEY NATIONAL LABORATORY
UNIVERSITY OF CALIFORNIA - BERKELEY

LHC IR FEEDBOX
MAJOR ASSEMBLY
DFBXF (IP5,RIGHT) FEED BOX ASSY, IP5 (RIGHT)

MICROFILMED:	DWG. TYPE	SHOWN ON	SCALE: 13/100	DO NOT SCALE PRINTS
	ASSEM	-	SHEET 7 OF 11	
PATENT CLEAR:	DESIGN ACCT. NO.	CATEGORY CODE	DWG. NO.	SIZE / REV.
	Z5LCE2	LH2001	24C3956	B

DWG. NO. 24C3956 SIZE B REV. 7

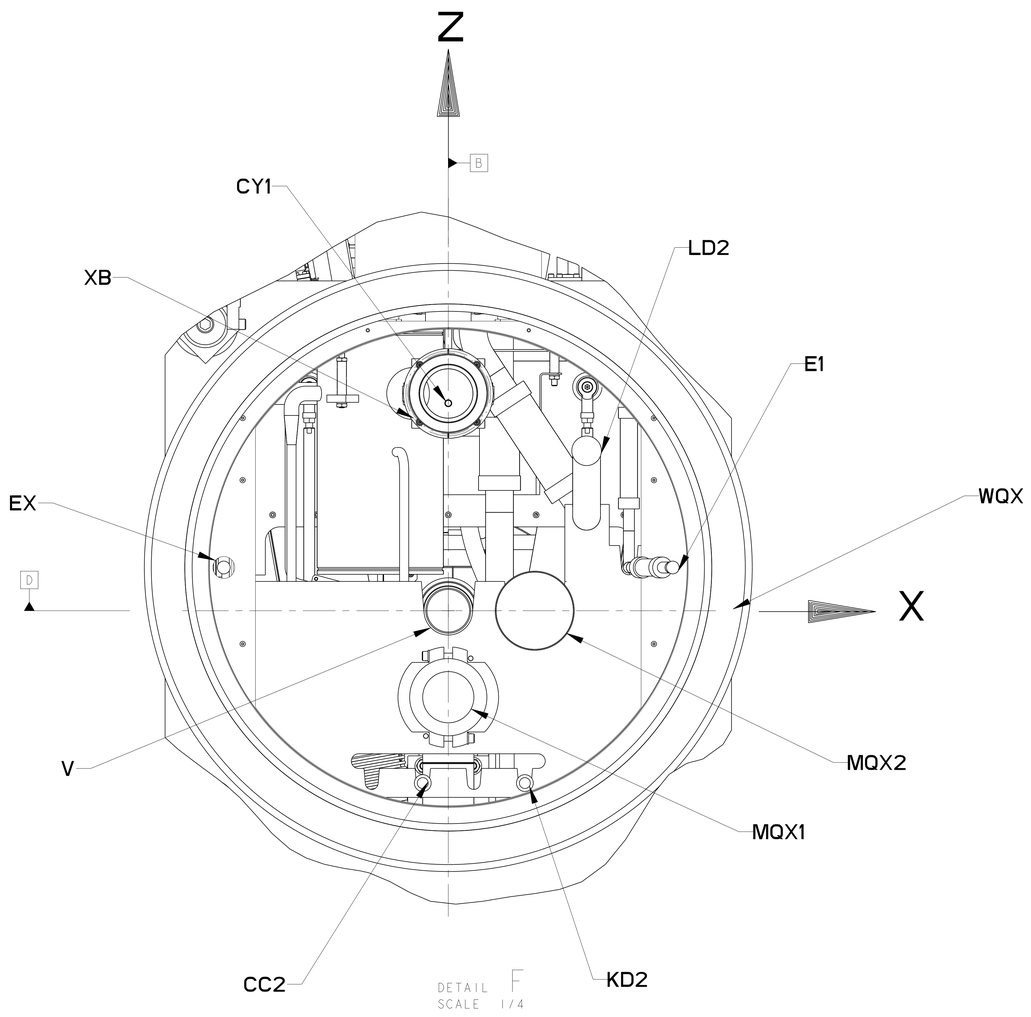

DETAIL F
SCALE 1/4

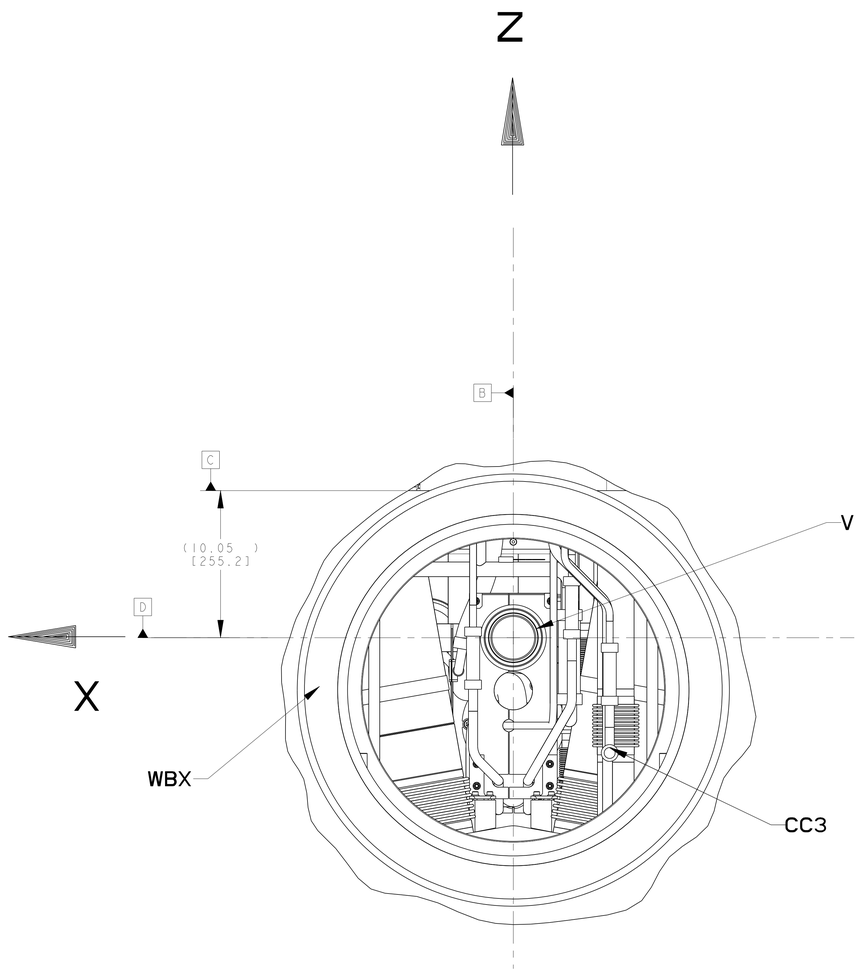

DETAIL E
SCALE 1/4

Q3 PIPING INTERFACE
PER SPEC. LHC-DFBX-ES-210.00 REV 1.0

DFBX	PIPE OD/ID		PIPE COORDINATES AT 300 K		
DFBX	OD in [mm]	ID in [mm]	X in [mm] ±.08	Z in [mm] ±.08	Y in [mm] ±.08
V	3.071 [78]	2.913 [73.99]	.000 [0]	.000 [0]	-2.032 [-51.61]
LD2	1.748 [44.4]	1.650 [41.91]	9.449 [240]	10.925 [277.5]	-6.299 [-159.99]
CC3	.626 [15.9]	.528 [13.41]	5.232 [132.89]	-11.772 [-299.01]	-6.299 [-159.99]
CC2	.626 [15.9]	.528 [13.41]	-1.744 [-44.3]	-11.772 [-299.01]	-6.299 [-159.99]
CY1	.626 [15.9]	.528 [13.41]	.000 [0]	14.173 [359.99]	-6.299 [-159.99]
E1	1.500 [38.1]	1.370 [34.8]	15.339 [389.61]	2.953 [75.01]	-6.299 [-159.99]
EX	1.500 [38.1]	1.370 [34.8]	-15.339 [-389.61]	2.953 [75.01]	-6.299 [-159.99]
MQX1	3.500 [88.9]	3.370 [85.6]	.000 [0]	-5.906 [-150.01]	-6.299 [-159.99]
MQX2	3.500 [88.9]	3.370 [85.6]	5.906 [150.01]	.000 [0]	-6.299 [-159.99]
WQX	41.535 [1055]	35.039 [890]	.000 [0]	2.953 [75.01]	.000 [0]
XB	3.500 [88.9]	3.370 [85.6]	.000 [0]	14.839 [376.91]	-6.299 [-159.99]

D1 PIPING INTERFACE
PER SPEC. LHC-DFBX-ES-230.00 REV 1.1

	PIPE OD/ID		PIPE COORDINATES AT 300 K		
DFBX	OD in [mm]	ID in [mm]	X in [mm] ±.08	Z in [mm] ±.08	Y in [mm] ±.08
V	3.06 [77.7]	2.91 [73.9]	.000 [0]	.000 [0]	13.504 [343]
CC3	.63 [16]	.53 [13.5]	-6.583 [-167.21]	-7.874 [-200]	14.843 [377.01]
WBX	29.53 [750.1]	23.50 [596.9]	.000 [0]	-3.528 [-89.61]	.000 [0]

△5

THIRD ANGLE PROJECTION

ERNEST ORLANDO LAWRENCE
BERKELEY NATIONAL LABORATORY
UNIVERSITY OF CALIFORNIA - BERKELEY

LHC IR FEEDBOX
MAJOR ASSEMBLY
DFBXF (IP5,RIGHT) FEED BOX ASSY, IP5 (RIGHT)

MICROFILMED:	DWG. TYPE	SHOWN ON	SCALE: 1:3/100	DO NOT SCALE PRINTS
	ASSEM	-	SHEET 8 OF 11	
PATENT CLEAR:	DESIGN ACCT. NO.	CATEGORY CODE	DWG. NO.	SIZE / REV.
	Z5LCE2	LH2001	24C3956	B

DWG. NO. 24C3956 B 8

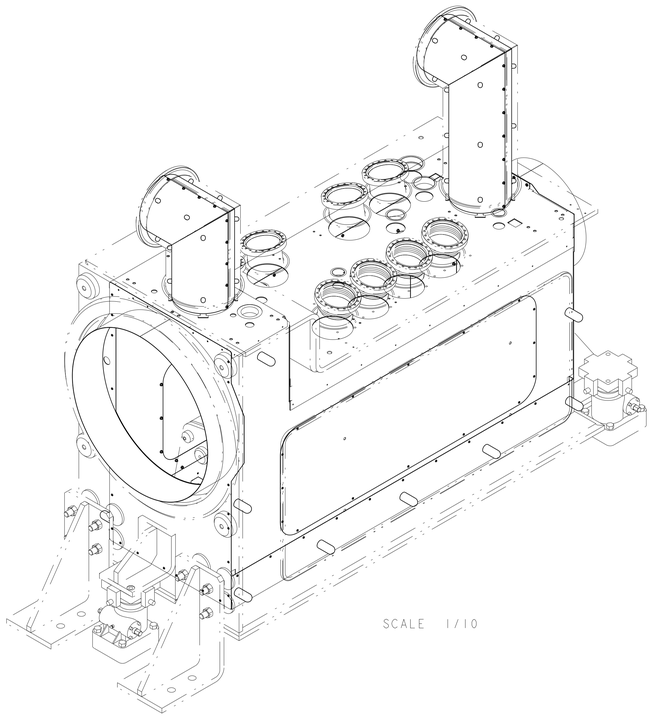

SCALE 1/10

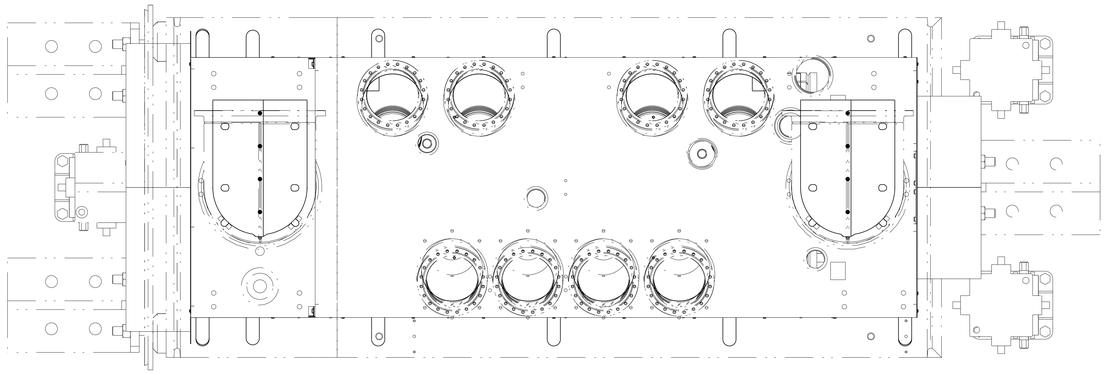

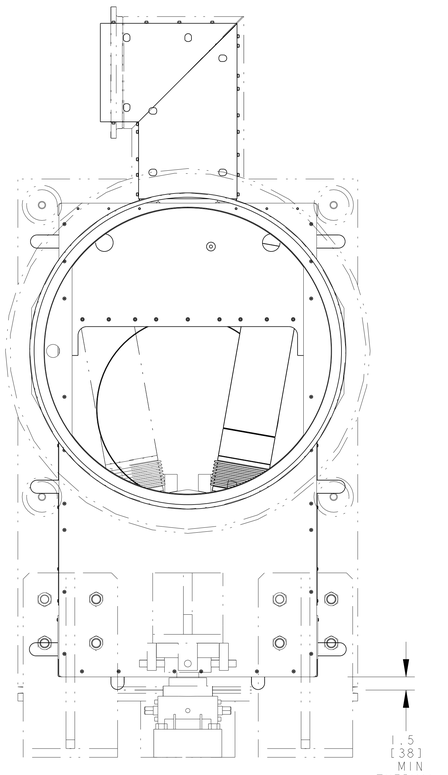

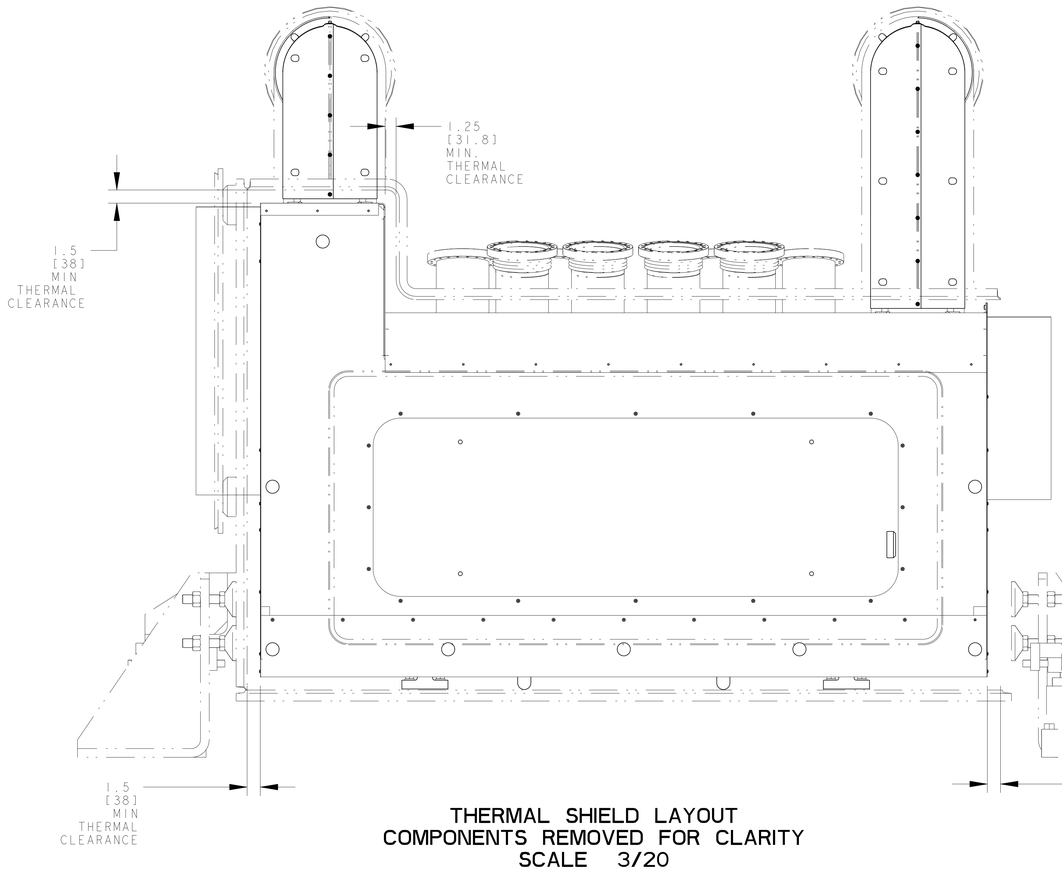

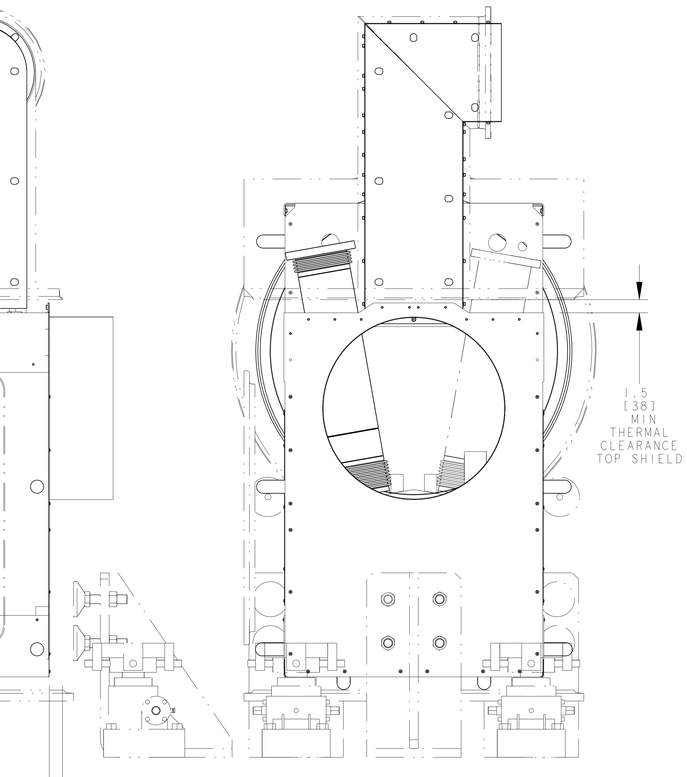

THERMAL SHIELD LAYOUT
COMPONENTS REMOVED FOR CLARITY
SCALE 3/20

THIRD ANGLE PROJECTION

ERNEST ORLANDO LAWRENCE
BERKELEY NATIONAL LABORATORY
UNIVERSITY OF CALIFORNIA - BERKELEY

LHC IR FEEDBOX
MAJOR ASSEMBLY
DFBXF (IP5,RIGHT) FEED BOX ASSY, IP5 (RIGHT)

MICROFILMED:	DWG. TYPE	SHOWN ON	SCALE: 1:3/100	DO NOT SCALE PRINTS
	ASSEM	-	SHEET 9 OF 11	
PATENT CLEAR:	DESIGN ACCT. NO.	CATEGORY CODE	DWG. NO.	SIZE / REV.
	Z5LCE2	LH2001	24C3956	B

DWG. NO. 24C3956 SHEET 9 B

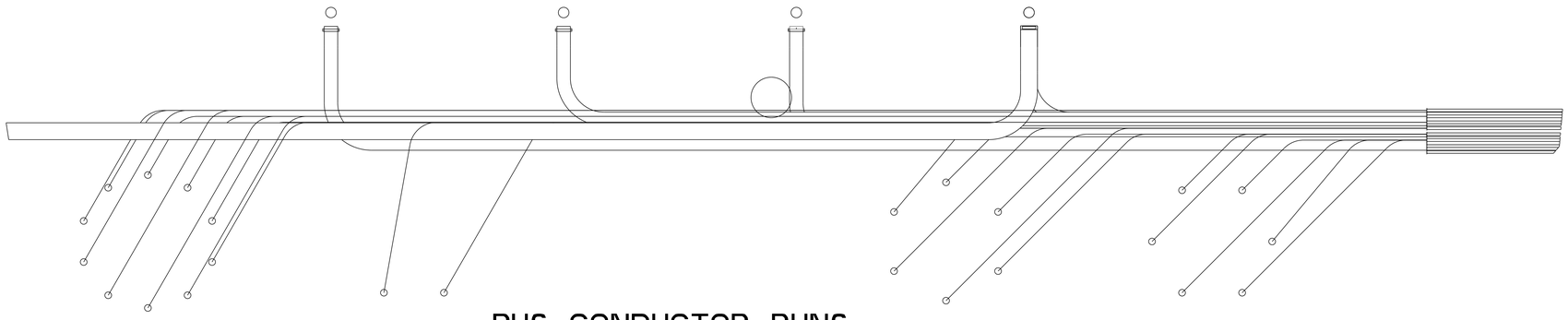

BUS CONDUCTOR RUNS

DETAIL N
SCALE 1/2

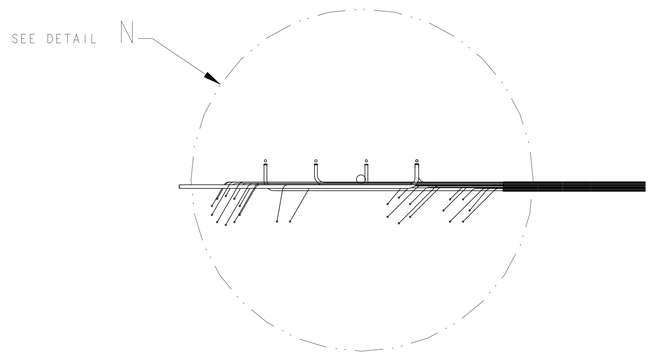

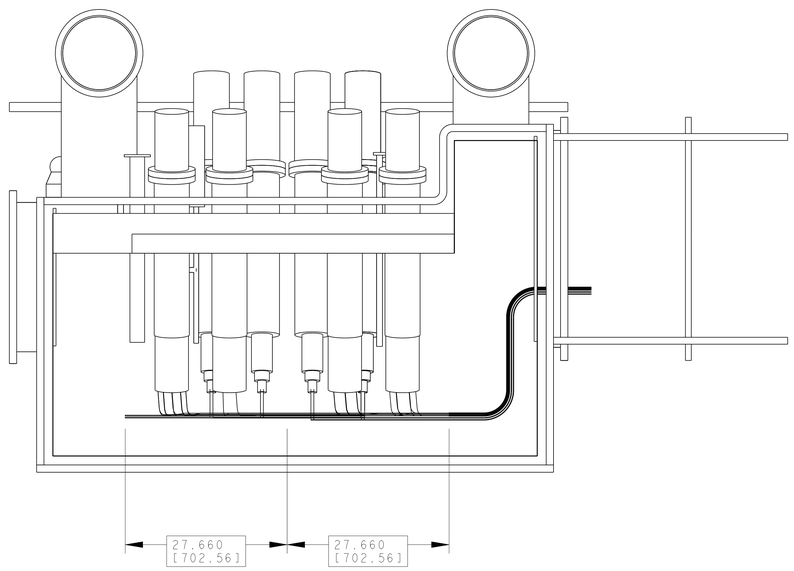

SCALE 1/10

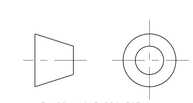

THIRD ANGLE PROJECTION

ERNEST ORLANDO LAWRENCE
BERKELEY NATIONAL LABORATORY
UNIVERSITY OF CALIFORNIA - BERKELEY

LHC IR FEEDBOX
MAJOR ASSEMBLY
DFBXF (IP5,RIGHT) FEED BOX ASSY, IP5 (RIGHT)

MICROFILMED:	DWG. TYPE	SHOWN ON	SCALE: 13/100	DO NOT SCALE PRINTS
	ASSEM	-	SHEET 10 OF 11	
PATENT CLEAR:	DESIGN ACCT. NO.	CATEGORY CODE	DWG. NO.	SIZE / REV.
	Z5LCE2	LH2001	24C3956	B

DWG. NO. 24C3956 SIZE B REV. 10

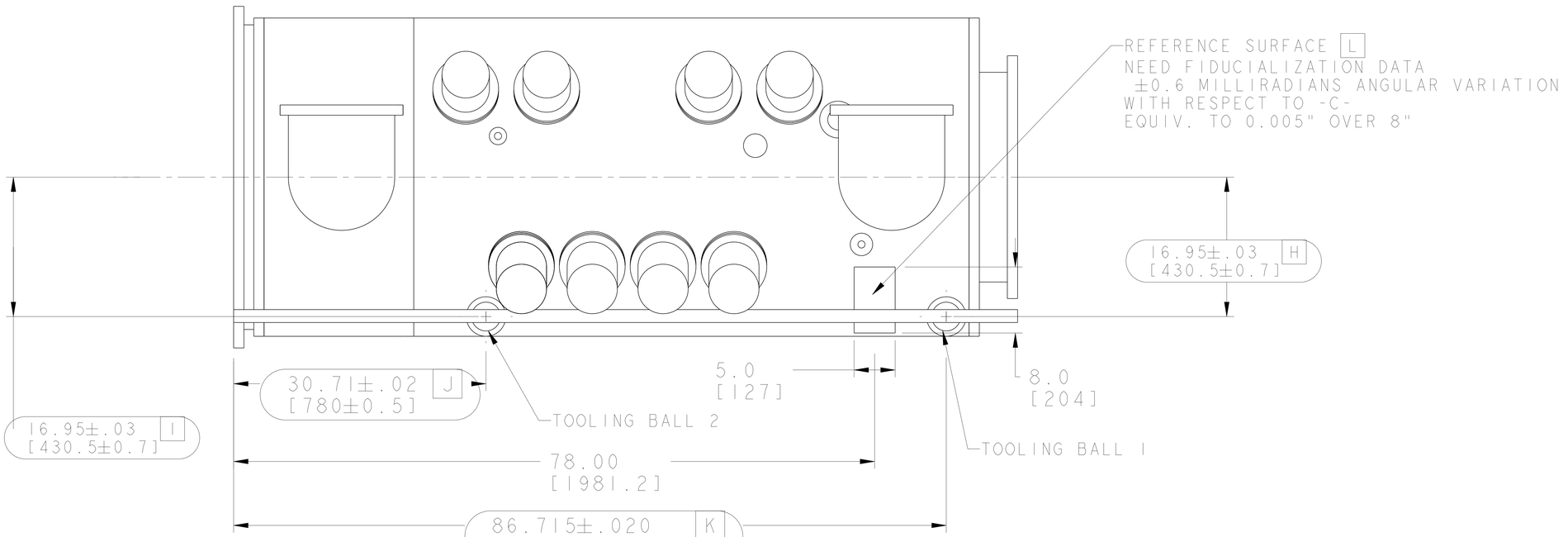

SCALE 17/100

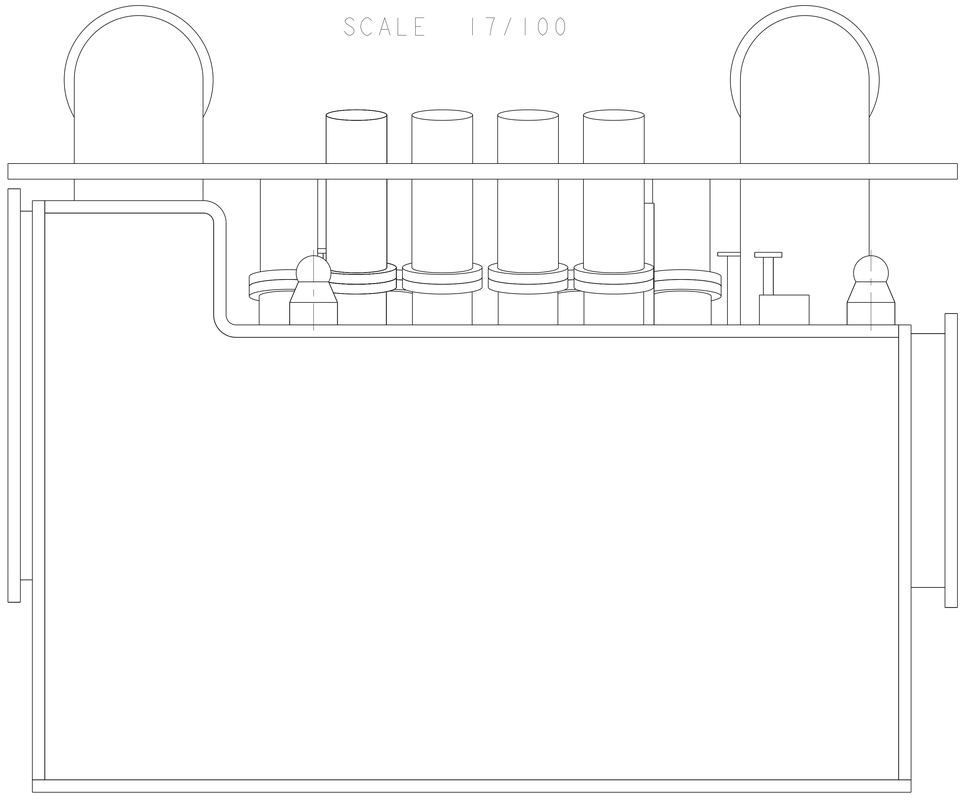

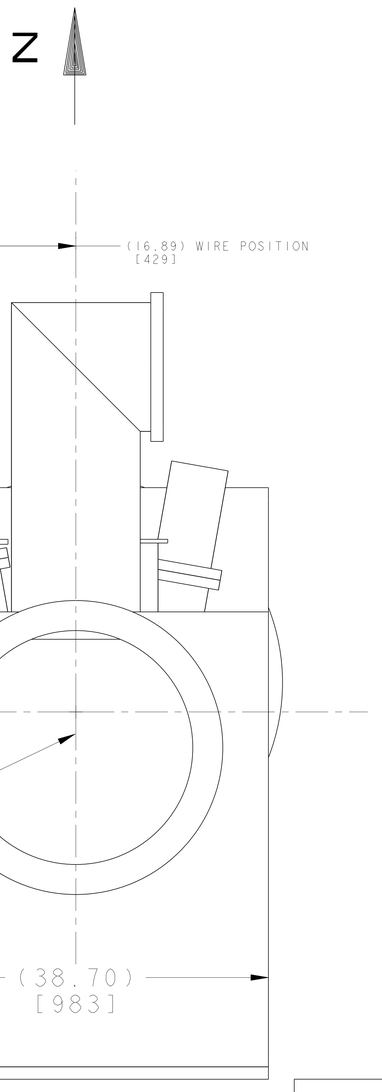

FIDUCIAL LAYOUT INFORMATION

THIRD ANGLE PROJECTION

ERNEST ORLANDO LAWRENCE
BERKELEY NATIONAL LABORATORY
UNIVERSITY OF CALIFORNIA - BERKELEY

LHC IR FEEDBOX
MAJOR ASSEMBLY
DFBXF (IP5,RIGHT) FEED BOX ASSY, IP5 (RIGHT)

MICROFILMED:	DWG. TYPE: ASSEM	SHOWN ON: -	SCALE: 13/100 DO NOT SCALE PRINTS
			SHEET 11 OF 11
PATENT CLEAR:	DESIGN ACCT. NO.: Z5LCE2	CATEGORY CODE: LH2001	DWG. NO.: 24C3956 SIZE: B REV.

DWG. NO. 24C3956 SHEET 11 OF 11 REV. B