NOTE:
1. DERIVED FROM SPECIFICATION LHC-DFBX-ES-100
2. DERIVED FROM SPECIFICATION LHC-DFBX-ES-200
3. DERIVED FROM SPECIFICATION LHC-DFBX-ES-210
4. DERIVED FROM SPECIFICATION LHC-DFBX-ES-240
5. DERIVED FROM SPECIFICATION LHC-DFBX-ES-260
6. DERIVED FROM SPECIFICATION LHC-DFBX-ES-250
7. DERIVED FROM SPECIFICATION LHC-DFBX-ES-230
8. FILL MOUNTING HOLES WITH EPOXY
9. HTS CURRENT LEAD IN SPECIFICATION M923B

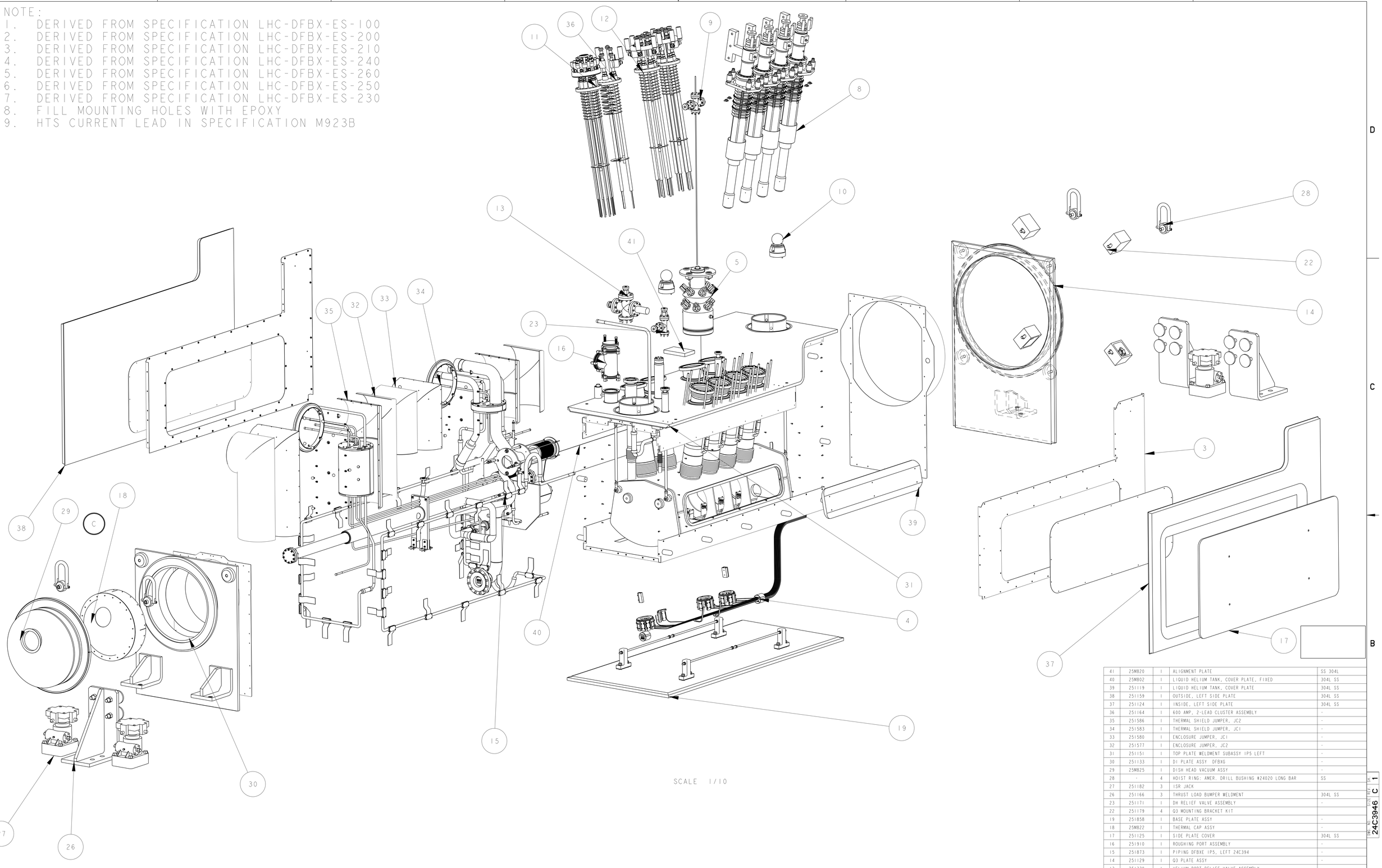

SCALE 1/10

ITEM	PART NO	REQD	DESCRIPTION	MATERIAL
41	25M820	1	ALIGNMENT PLATE	SS 304L
40	25M802	1	LIQUID HELIUM TANK, COVER PLATE, FIXED	304L SS
39	251119	1	LIQUID HELIUM TANK, COVER PLATE	304L SS
38	251159	1	OUTSIDE, LEFT SIDE PLATE	304L SS
37	251124	1	INSIDE, LEFT SIDE PLATE	304L SS
36	251164	1	600 AMP, 2-LEAD CLUSTER ASSEMBLY	-
35	251586	1	THERMAL SHIELD JUMPER, JC2	-
34	251583	1	THERMAL SHIELD JUMPER, JC1	-
33	251580	1	ENCLOSURE JUMPER, JC1	-
32	251577	1	ENCLOSURE JUMPER, JC2	-
31	251151	1	TOP PLATE WELDMENT SUBASSY IP5 LEFT	-
30	251133	1	DI PLATE ASSY DFBXG	-
29	25M825	1	DISH HEAD VACUUM ASSY	-
28	-	4	HOIST RING: AMER. DRILL BUSHING #24020 LONG BAR	SS
27	251182	3	ISR JACK	
26	251166	3	THRUST LOAD BUMPER WELDMENT	304L SS
23	251171	1	DH RELIEF VALVE ASSEMBLY	-
22	251179	4	Q3 MOUNTING BRACKET KIT	
19	251858	1	BASE PLATE ASSY	-
18	25M822	1	THERMAL CAP ASSY	-
17	251125	1	SIDE PLATE COVER	304L SS
16	251910	1	ROUGHING PORT ASSEMBLY	-
15	251873	1	PIPING DFBXE IP5, LEFT 24C394	-
14	251129	1	Q3 PLATE ASSY	-
13	251339	1	HELIUM PORT RELIEF VALVE ASSEMBLY	-
12	24C353	2	600 AMP,6 LEAD VAPOR COOLED ASSY	-
11	24C322	1	120 AMP VC LEAD MOUNTING ASSY	-
10	251868	2	TOOLING BALL, LHCQIMSA00092	-
9	251162	1	LHE DIAGNOSTIC ASSY	-
8	251156	6	PIRELLI HTS LEAD KIT	-
5	251831	1	LQX DIAGONSTIC ASSEMBLY	-
4	251864	1	BUS DUCT ASSEMBLY	-
3	251079	1	THERMAL SHIELD ASSY, DFBXG	-

DWG NO. 24C3946 SIZE C REV 1

SCALE 1/10

11. SOLDER JOINT USING SN60PB40 SOLDER; ROSIN FLUX, USE SPLICE PLATE IF REQUIRED
12. CLOSEOUT WELD PROCEDURE TO BE APPROVED BY LBNL
    DISTORTION CONTROL IS ESSENTIAL, ROOT PASS GTAW, COVER PASSES GMAW, SMAW, FCMAW.
13. WELD PROCEDURE TO BE APPROVED BY LBNL, USE GTAW PROCESS
14. BELLOWS TO BE WITHIN 0.03" OF FREE CONFIGURATION AFTER CLOSEOUT WELDING
15. DIMENSIONS FROM DFBX FLANGE FACE ON DI SIDE, ADD -2367.2 MM TO OBTAIN POSITION RELEATIVE TO DFBX COORDINATE SYSTEM
16. SHIM TANK SUPPORTS TO LIMIT STATIC DEFLECTION OF THE LOWER TANK SUPPORT RODS TO LESS THAN 0.25"
17. DIMENSIONS SHOW IN INSPECTION OVAL ARE REFERENCED IN THE FABRICATION TRAVELER
18. COPPER STRAP ATTACHED TO THE THERMAL ANCHORS DO NOT HAVE TO BE EVENLY SPACED.
19. ALL DIMENSIONS GIVEN AT ROOM TEMPERATURE

THIRD ANGLE PROJECTION

REV	DWG	CHK	ZONE	DATE	CHANGES
C	JDR	DPO		03/03/03	MOVED PIPE END LOCATIONS CHANGED WELD ON SIDE PLATE COVER ADDED DISH HEAD VACUUM ASSY
B	JDR	DPO		12/12/02	INITIAL RELEASE
A	JDR	DPO		10/03/02	PRELIMINARY RELEASE

UNLESS OTHERWISE SPECIFIED
TOLERANCES:
X.X ± 0.1 | FRAC. ± 1/64
X.XX ± 0.03 | Angles ± 1.00°
X.XXX ± 0.010 | FINISH: 125 µin
DO NOT SCALE PRINT
THREADS ARE CLASS 2
CHAMFER ENDS OF ALL SCREW THREADS 30°
CUT ROUND, 1.5 THREAD RELIEF ON MACHINED THREADS
BREAK EDGES .016 MAX. ON MACHINED WORK
REMOVE BURRS, WELD SPLATTER & LOOSE SCALE
IN ACCORDANCE WITH ASME Y14.5M-1.8A6.1

SHOP ORDERS
ACCT NO.
REL TO
SURFACE TREATMT
IDENT METHOD TAG
PROJECT NUMBER -
PROJECT NAME N/A
DWN M J KNOLLS — DATE 02-Nov-01
CHK Jon Zbasnik — DATE 03-OCT-02
APP Jon Zbasnik — DATE 03-OCT-02

ERNEST ORLANDO LAWRENCE BERKELEY NATIONAL LABORATORY
UNIVERSITY OF CALIFORNIA - BERKELEY

LHC IR FEEDBOX
MAJOR ASSEMBLY
DFBXE (IP5, LEFT) FEED BOX ASSY

MICROFILMED: | DWG. TYPE: ASSEM | SHOWN ON: - | SCALE: 1:7/100 | DO NOT SCALE PRINTS
PATENT CLEAR: | DESIGN ACCT. NO. Z5LCE2 | CATEGORY CODE LH2001 | SHEET 1 OF 11 | DWG. NO. 24C3946 | REV C

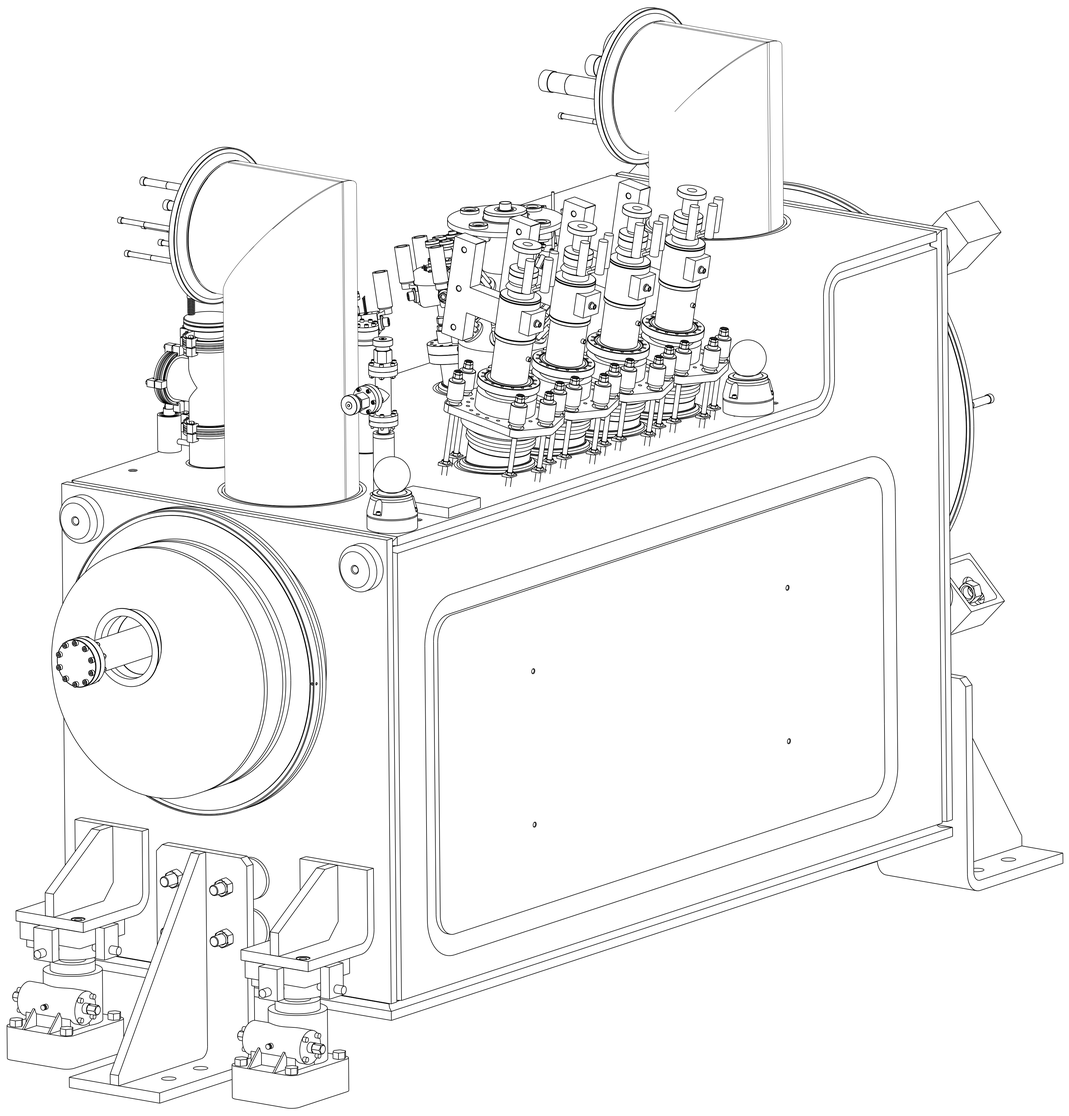

D1 END

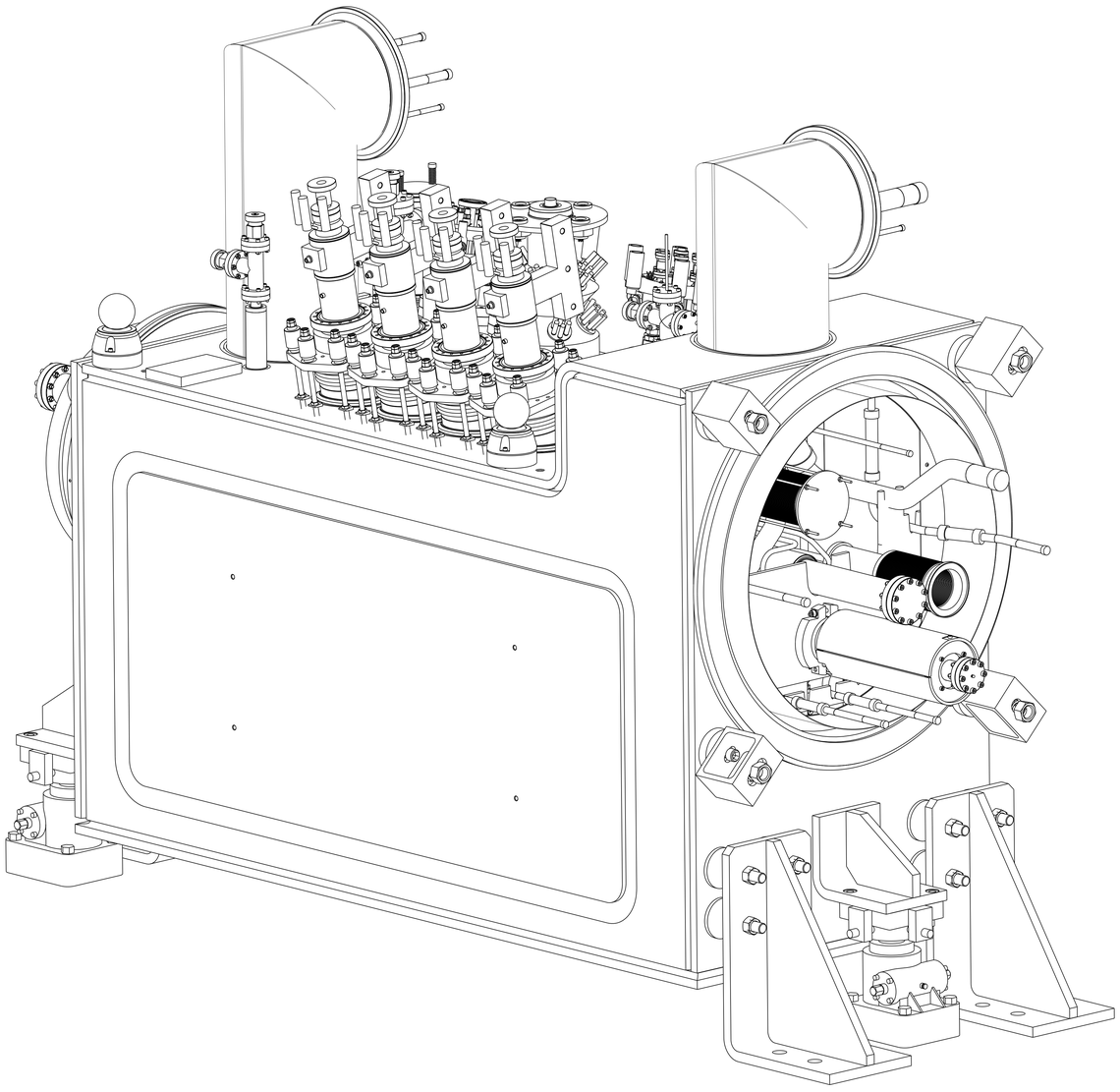

Q3 END

DFBXE, IP5 (LEFT)

THIRD ANGLE PROJECTION

ERNEST ORLANDO LAWRENCE
BERKELEY NATIONAL LABORATORY
UNIVERSITY OF CALIFORNIA - BERKELEY

LHC IR FEEDBOX
MAJOR ASSEMBLY
DFBXE (IP5, LEFT) FEED BOX ASSY

MICROFILMED:	DWG. TYPE	SHOWN ON	SCALE: 9/50	DO NOT SCALE PRINTS
	ASSEM	-	SHEET 2 OF 11	
PATENT CLEAR:	DESIGN ACCT. NO.	CATEGORY CODE	DWG. NO.	SIZE / REV.
	Z5LCE2	LH2001	24C3946	C

DWG. NO. 24C3946 SIZE C SHT 2

THIS ITEM CONTAINS PROPRIETARY DATA

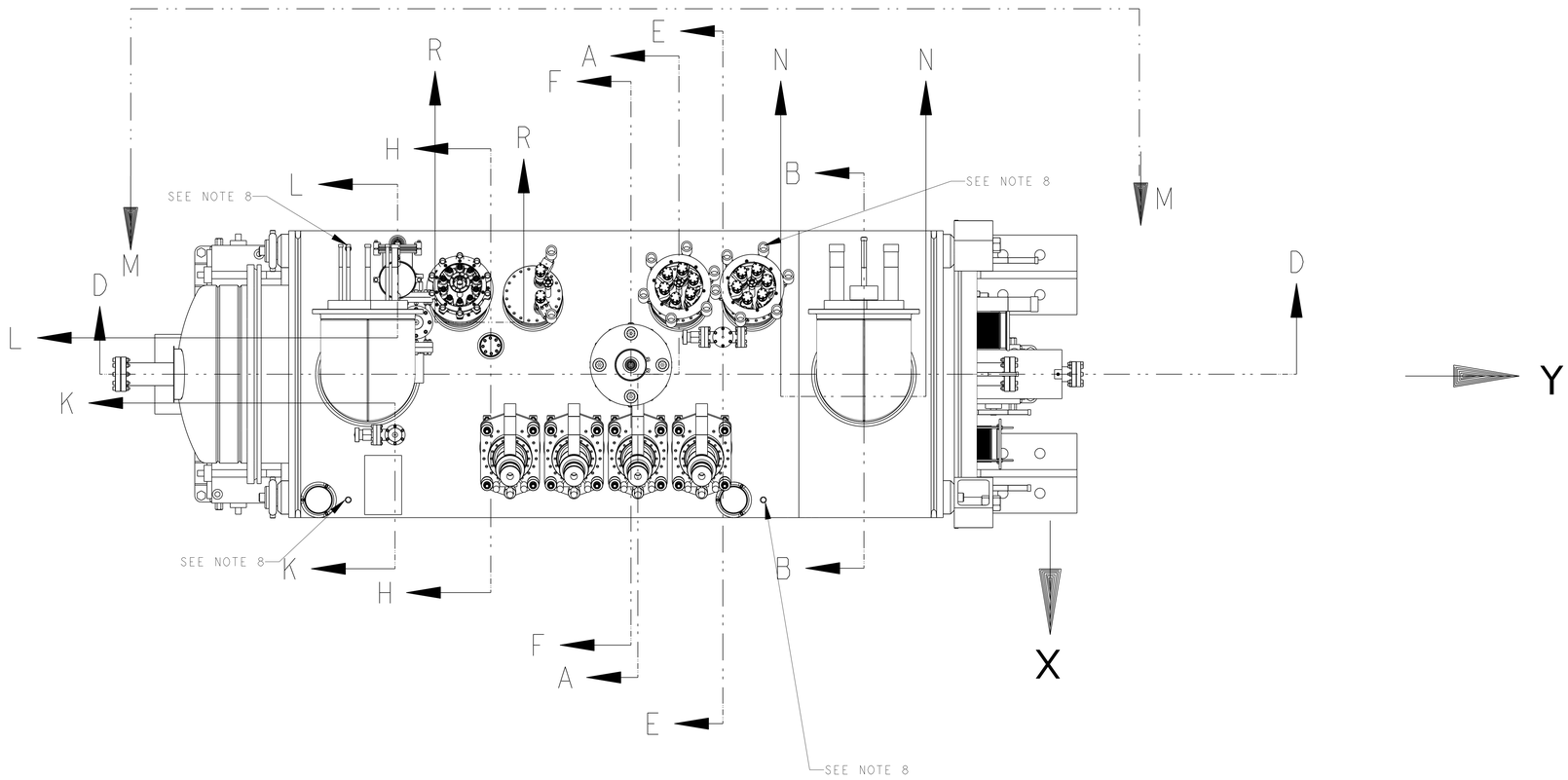

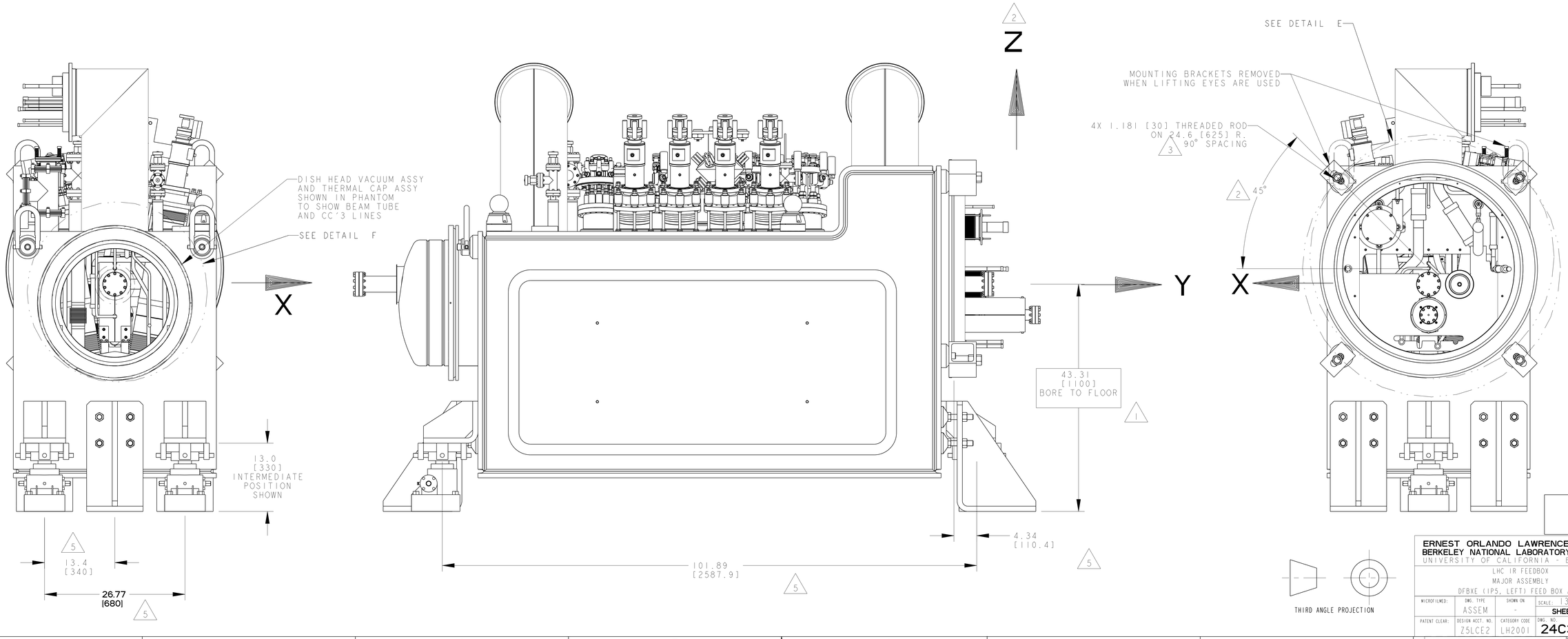

ERNEST ORLANDO LAWRENCE BERKELEY NATIONAL LABORATORY
UNIVERSITY OF CALIFORNIA - BERKELEY

LHC IR FEEDBOX
MAJOR ASSEMBLY
DFBXE (IP5, LEFT) FEED BOX ASSY

MICROFILMED:	DWG. TYPE	SHOWN ON	SCALE: 1:7/100	DO NOT SCALE PRINTS
	ASSEM	-	SHEET 3 OF 11	
PATENT CLEAR:	DESIGN ACCT. NO.	CATEGORY CODE	DWG. NO.	SIZE / REV.
	Z5LCE2	LH2001	24C3946	C

DWG. NO. 24C3946 SHEET 3 OF 11 REV. C

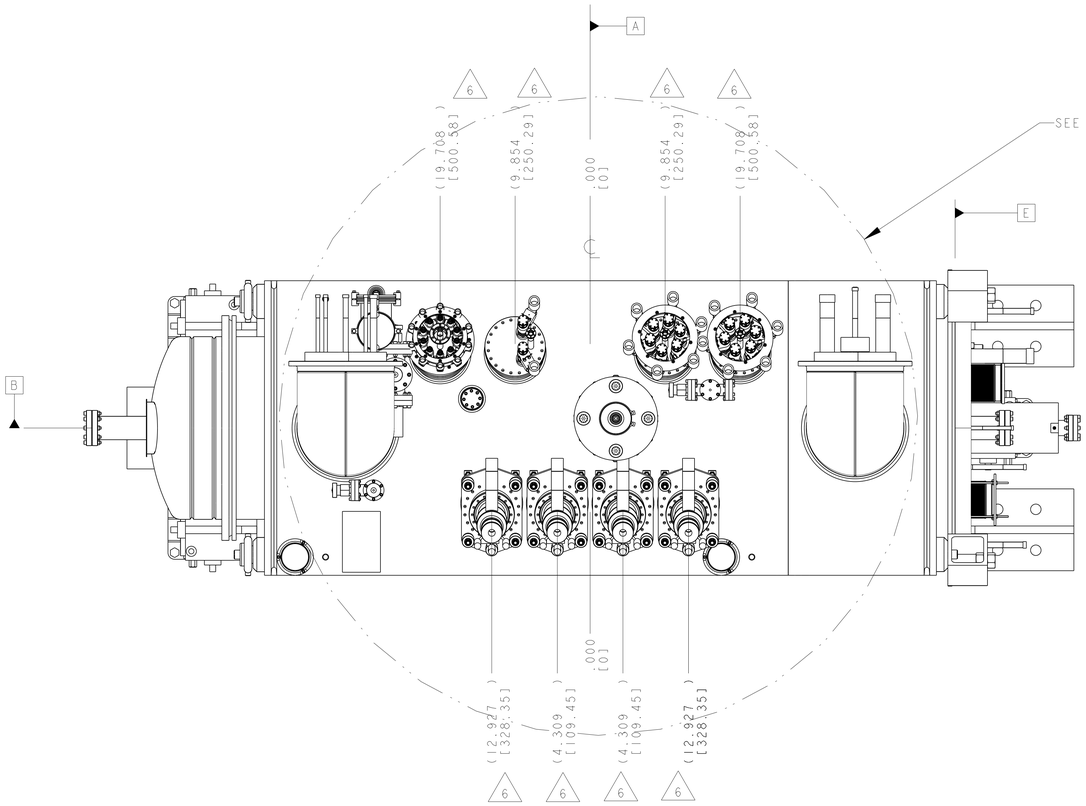

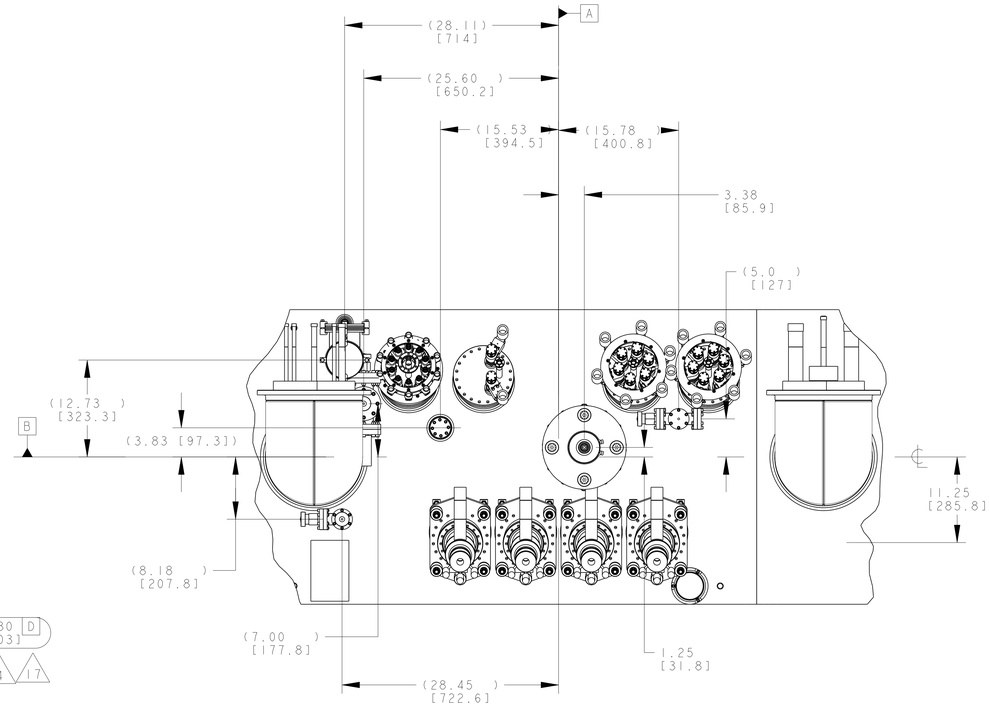

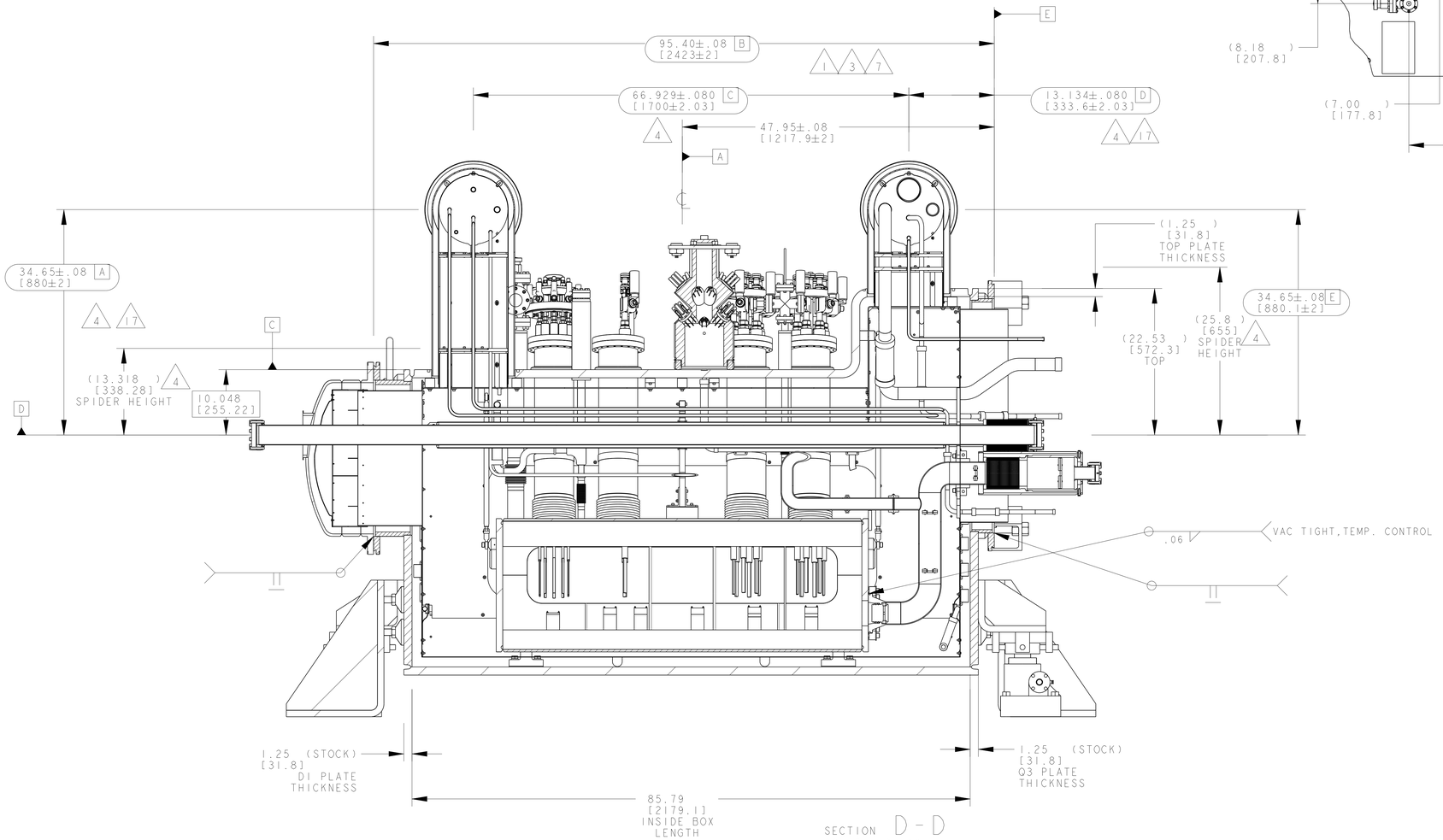

SECTION D - D
SCALE 1/3/100

DETAIL G
SCALE 1/3/100

THIRD ANGLE PROJECTION

ERNEST ORLANDO LAWRENCE BERKELEY NATIONAL LABORATORY
UNIVERSITY OF CALIFORNIA - BERKELEY

LHC IR FEEDBOX
MAJOR ASSEMBLY
DFBXE (IP5, LEFT) FEED BOX ASSY

MICROFILMED:	DWG. TYPE	SHOWN ON	SCALE: 1/3/100	DO NOT SCALE PRINTS
	ASSEM	-	SHEET 4 OF 11	
PATENT CLEAR:	DESIGN ACCT. NO.	CATEGORY CODE	DWG. NO.	SIZE / REV.
	Z5LCE2	LH2001	24C3946	C

DWG. NO. 24C3946 SIZE C REV 4

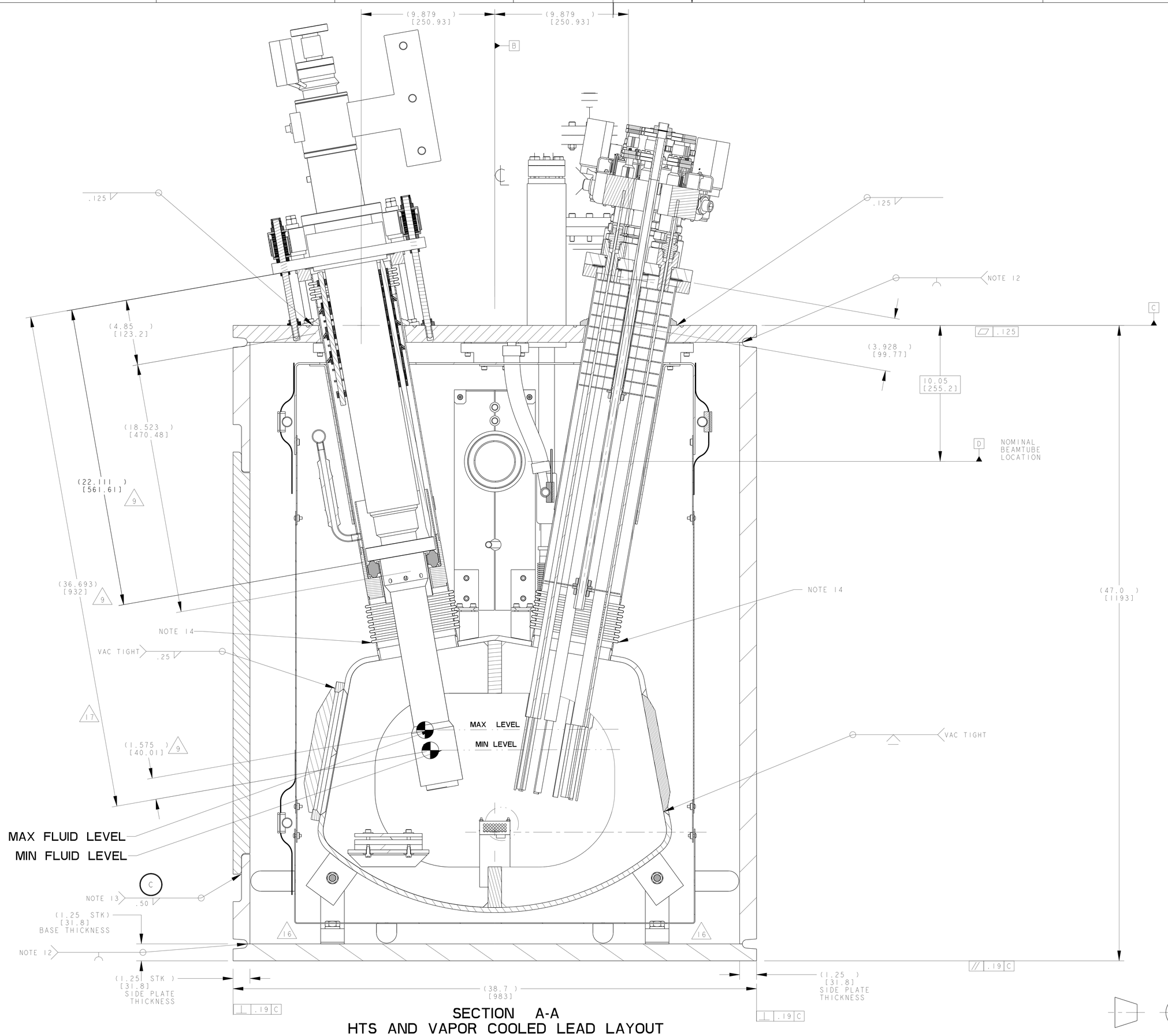

SECTION A-A
HTS AND VAPOR COOLED LEAD LAYOUT
SCALE 2/5

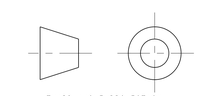

THIRD ANGLE PROJECTION

ERNEST ORLANDO LAWRENCE BERKELEY NATIONAL LABORATORY
UNIVERSITY OF CALIFORNIA - BERKELEY

LHC IR FEEDBOX
MAJOR ASSEMBLY
DFBXE (IP5, LEFT) FEED BOX ASSY

MICROFILMED:	DWG. TYPE	SHOWN ON	SCALE: 13/100	DO NOT SCALE PRINTS
	ASSEM	-	SHEET 5 OF 11	
PATENT CLEAR:	DESIGN ACCT. NO.	CATEGORY CODE	DWG. NO.	SIZE / REV.
	Z5LCE2	LH2001	24C3946	C

DWG. NO. 24C3946 SIZE C REV. 5

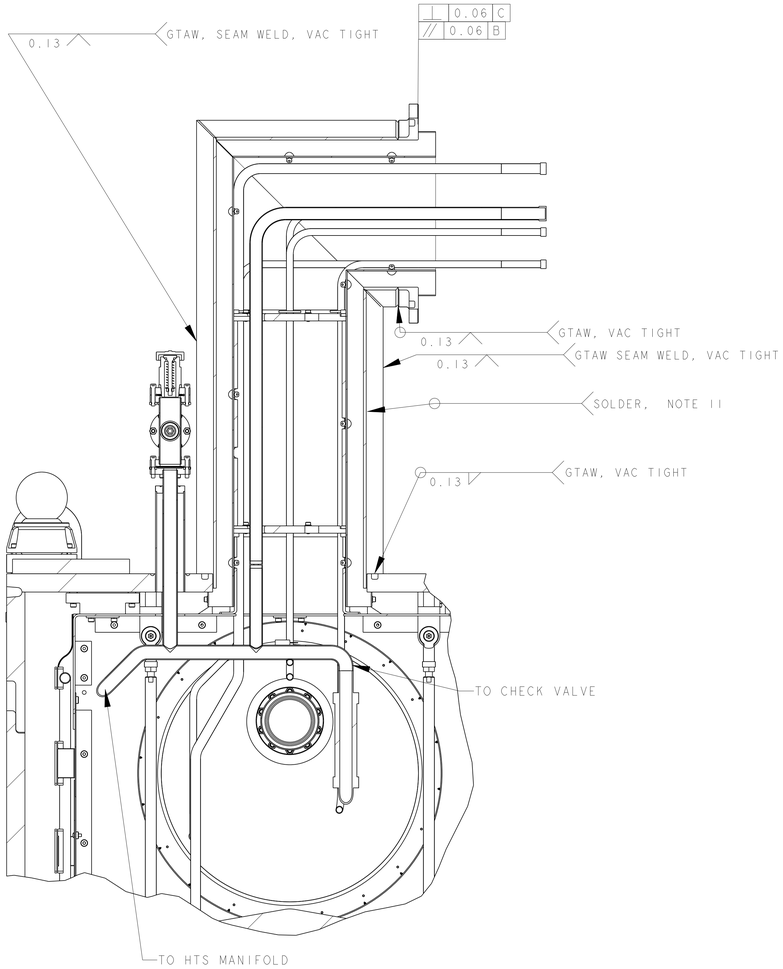

SECTION K - K
SCALE 1/4

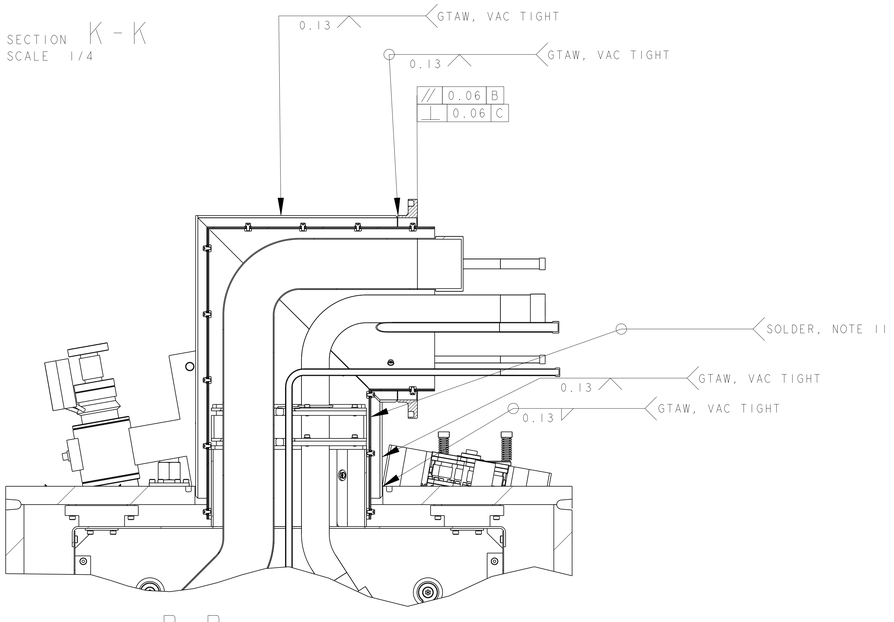

SECTION B - B
SCALE 1/4

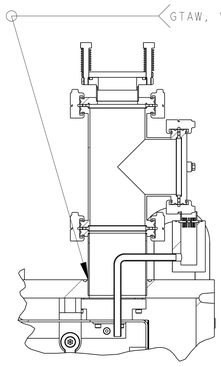

SECTION L - L
SCALE 1/4

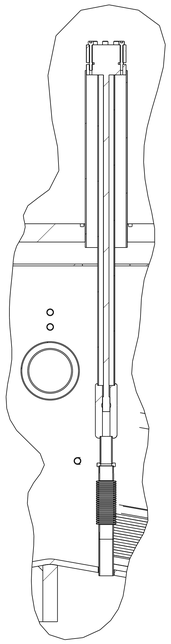

SECTION H - H
SCALE 1/4

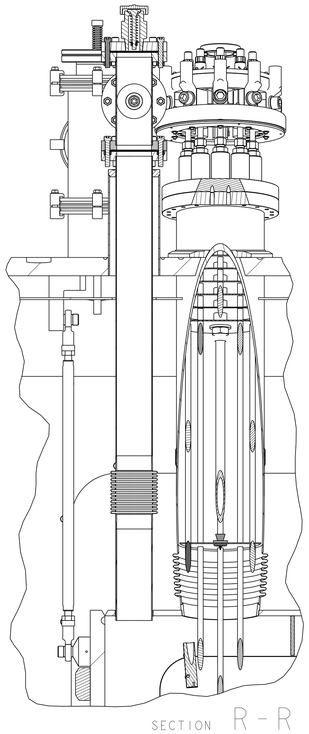

SECTION R - R
SCALE 1/4

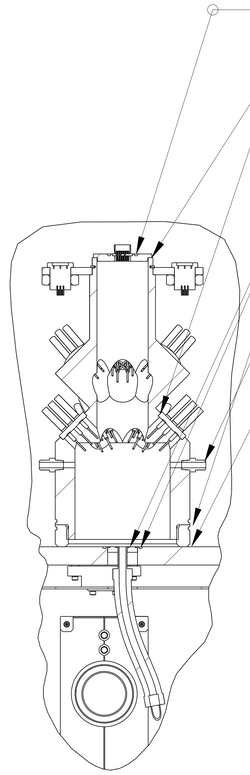

SECTION F - F
SCALE 1/4

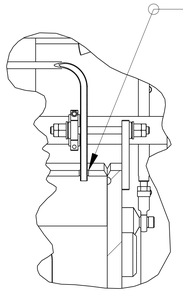

SECTION N - N
SCALE 1/4

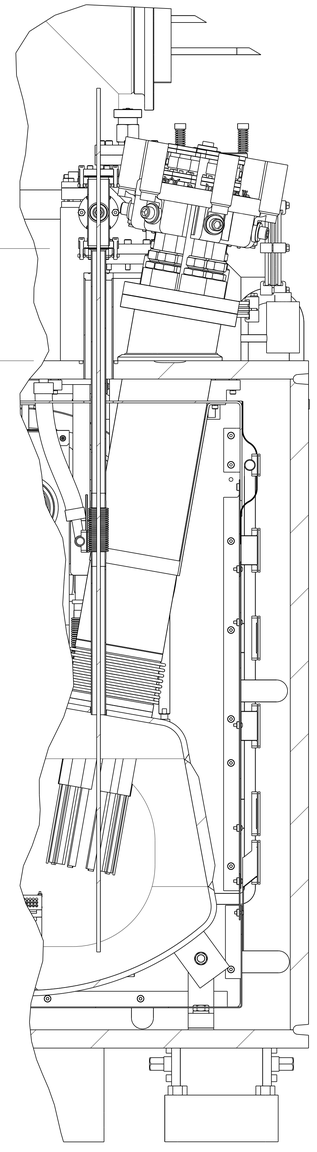

SECTION E - E
SCALE 1/4

ERNEST ORLANDO LAWRENCE BERKELEY NATIONAL LABORATORY, UNIVERSITY OF CALIFORNIA - BERKELEY				
LHC IR FEEDBOX MAJOR ASSEMBLY DFBXE (IP5, LEFT) FEED BOX ASSY				
MICROFILMED:	DWG. TYPE: ASSEM	SHOWN ON: -	SCALE: 1/100	DO NOT SCALE PRINTS
			SHEET 6 OF 11	
PATENT CLEAR:	DESIGN ACCT. NO.: Z5LCE2	CATEGORY CODE: LH2001	DWG. NO.: 24C3946	REV: C

DWG. NO. 24C3946 SHT 6 REV C

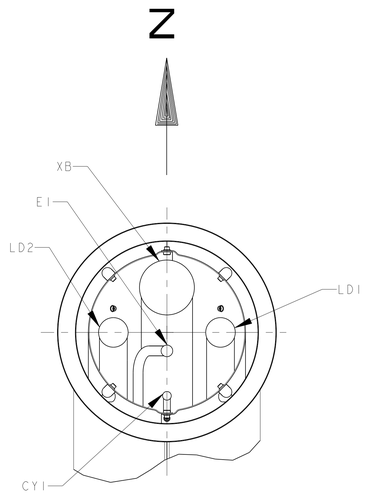

		DIM'S MEASURED FROM FLANGE CENTER	
PIPE	X	Y ±0.08	Z ±0.08
XB	-14.45±.08 [367±2]	0	3.07 [78]
LD2	-14.45±.08 [367±2]	3.66 [93]	0
LD1	-14.45±.08 [367±2]	-3.66 [93]	0
E1	-14.45±.08 [367±2]	0	-1.26 [32]
CY1	-14.45±.08 [367±2]	0	-4.33 [110]

4

DETAIL C
JC1 / QQSC
DIMENSIONAL TOLERANCE ± 0.08
ORIENTATION OPPOSITE OF SPECIFICATION 240
SCALE 1/4

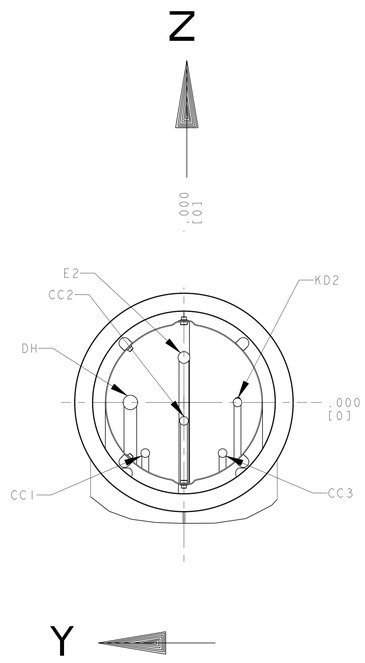

		DIM'S MEASURED FROM FLANGE CENTER	
PIPE	X	Y ±0.08	Z ±0.08
E2	-14.45±.08 [367±2]	0	3.07 [78]
DH	-14.45±.08 [367±2]	3.66 [93]	0
KD2	-11.85±.08 [301±2]	-3.66 [93])	0
CC2	-14.45±.08 [367±2]	0	-1.26 [32]
CC1	-14.45±.08 [367±2]	2.64 [67]	-3.46 [88]
CC3	-14.45±.08 [367±2]	-2.64 [67]	-3.46 [88]
CY2	-14.45±.08 [367±2]	0	-4.33 [110]

4

DETAIL D
JC2 / QQSD
DIMENSIONAL TOLERANCE ± 0.08
ORIENTATION OPPOSITE OF SPECIFICATION 240
SCALE 1/4

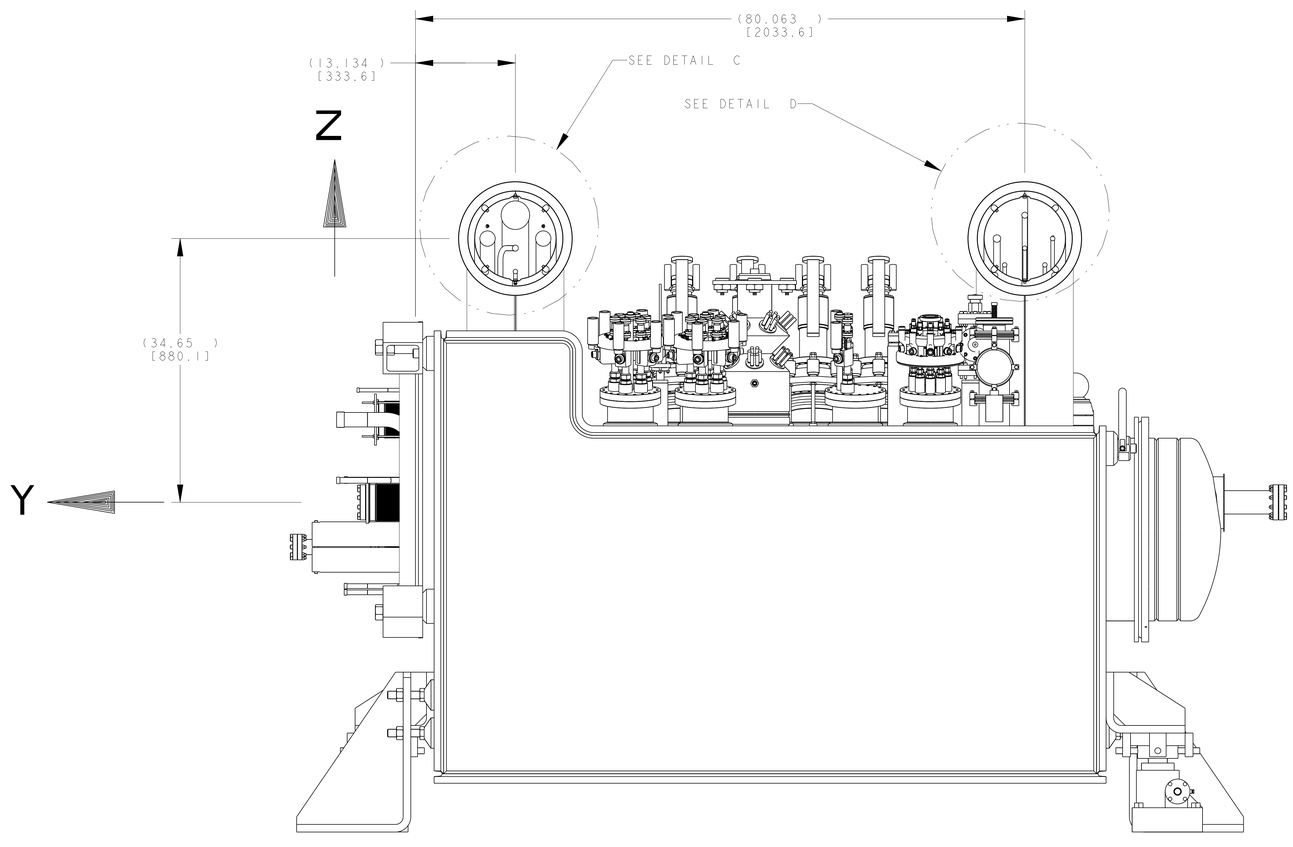

VIEW M - M
ROTATED 180°

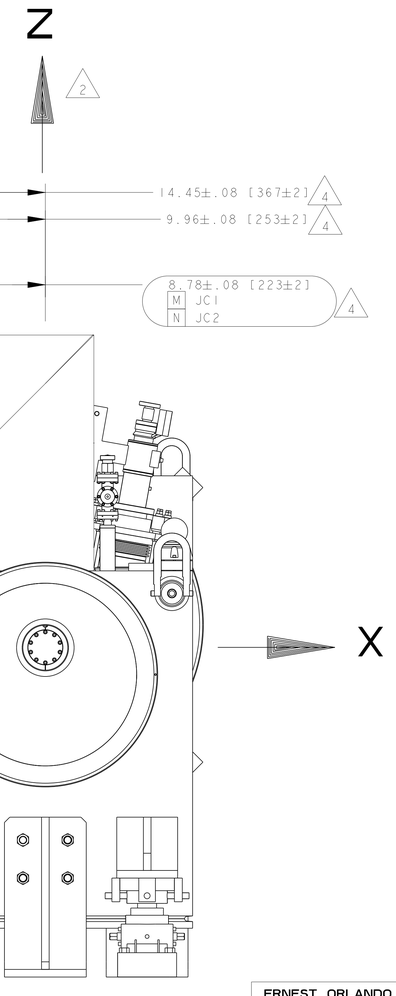

THIRD ANGLE PROJECTION

ERNEST ORLANDO LAWRENCE BERKELEY NATIONAL LABORATORY
UNIVERSITY OF CALIFORNIA - BERKELEY

LHC IR FEEDBOX
MAJOR ASSEMBLY
DFBXE (IP5, LEFT) FEED BOX ASSY

MICROFILMED:	DWG. TYPE	SHOWN ON	SCALE: 1:7/100	DO NOT SCALE PRINTS
	ASSEM	-	SHEET 7 OF 11	
PATENT CLEAR:	DESIGN ACCT. NO.	CATEGORY CODE	DWG. NO.	SIZE / REV.
	Z5LCE2	LH2001	24C3946	C

DWG. NO. 24C3946 SIZE C SH 7

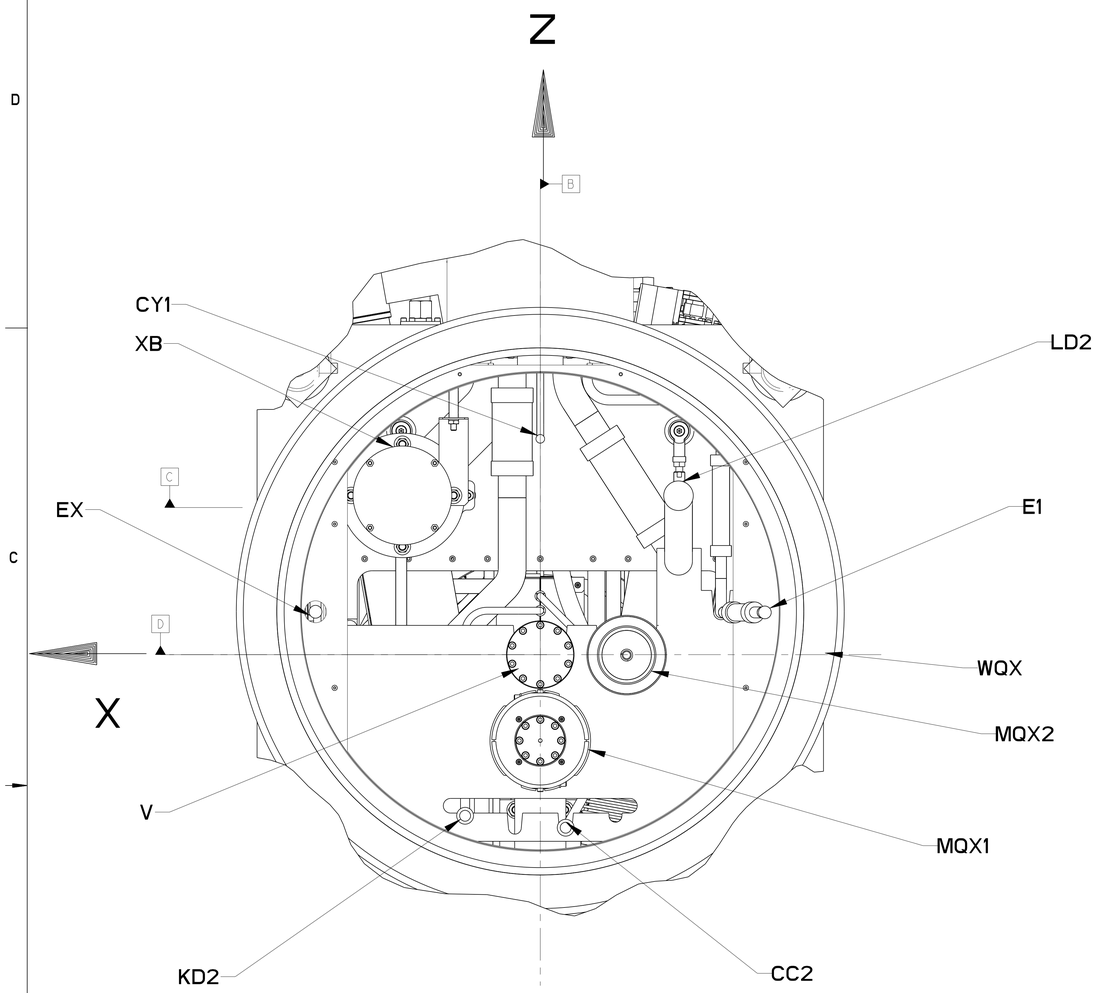

DETAIL E
SCALE 1/4

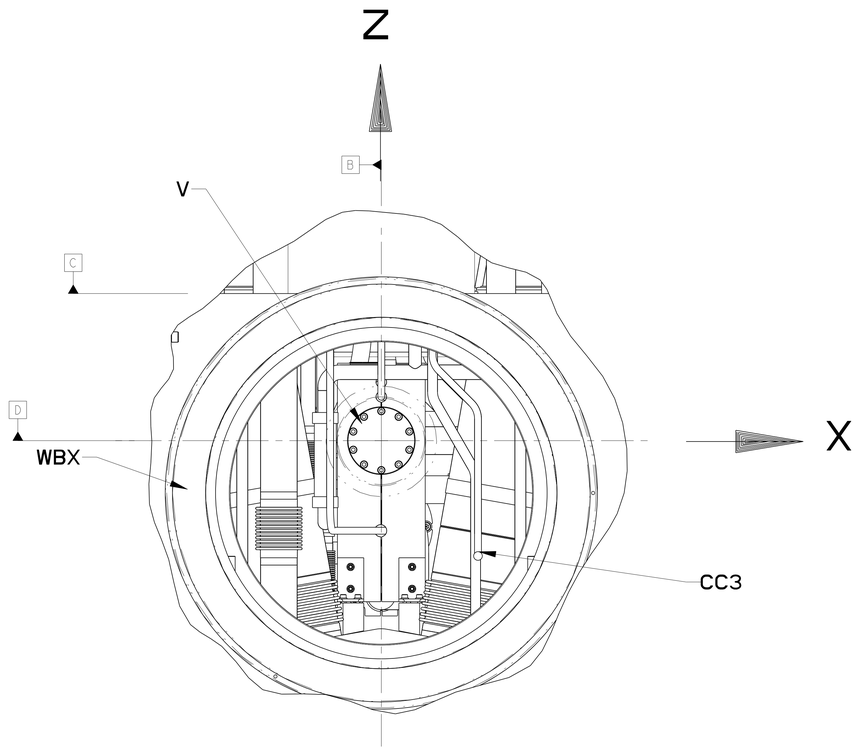

DETAIL F
SCALE 1/4

C

Q3 PIPING INTERFACE
PER SPEC. LHC-DFBX-ES-210.00 REV 1.0

DFBX	PIPE OD/ID		PIPE COORDINATES AT 300 K		
DFBX	OD in [mm]	ID in [mm]	X in [mm] ±.08	Z in [mm] ±.08	Y in [mm] ±.08
V	3.071 [78]	2.913 [73.99]	.000 [0]	.000 [0]	2.032 [51.61]
LD2	1.748 [44.4]	1.650 [41.91]	-9.444 [-239.88]	10.855 [275.72]	6.299 [159.99]
KD2	.626 [15.9]	.528 [13.41]	5.137 [130.48]	-11.822 [-300.28]	6.299 [159.99]
CC2	.626 [15.9]	.528 [13.41]	-1.735 [-44.07]	-11.822 [-300.28]	6.299 [159.99]
CY1	.626 [15.9]	.528 [13.41]	.000 [0]	14.742 [374.45]	3.617 [91.87]
E1	1.500 [38.1]	1.370 [34.8]	-15.345 [-389.76]	2.885 [73.28]	6.299 [159.99]
EX	1.500 [38.1]	1.370 [34.8]	15.355 [390.02]	2.929 [74.4]	6.299 [159.99]
MQX1	3.500 [88.9]	3.370 [85.6]	.000 [0]	-5.871 [-149.12]	6.299 [159.99]
MQX2	3.500 [88.9]	3.370 [85.6]	-5.902 [-149.91]	-.031 [-0.79]	6.299 [159.99]
WQX	41.535 [1055]	35.039 [890]	.000 [0]	2.953 [75.01]	.000 [0]
XB	3.500 [88.9]	3.370 [85.6]	9.420 [239.27]	10.876 [276.25]	5.118 [130]

C

D1 PIPING INTERFACE
PER SPEC. LHC-DFBX-ES-230.00 REV 1.1

	PIPE OD/ID		PIPE COORDINATES AT 300 K		
DFBX	OD in [mm]	ID in [mm]	X in [mm] ±.08	Z in [mm] ±.08	Y in [mm] ±.08
V	3.06 [77.7]	2.91 [73.9]	.000 [0]	.000 [0]	-13.504 [-343]
CC3	.63 [16]	.53 [13.5]	6.604 [167.74]	-7.879 [-200.13]	-14.843 [-377.01]
WBX	29.53 [750.1]	23.50 [596.9]	.000 [0]	-3.528 [-89.61]	.000 [0]

△5

THIRD ANGLE PROJECTION

ERNEST ORLANDO LAWRENCE
BERKELEY NATIONAL LABORATORY
UNIVERSITY OF CALIFORNIA - BERKELEY

LHC IR FEEDBOX
MAJOR ASSEMBLY
DFBXE (IP5, LEFT) FEED BOX ASSY

MICROFILMED:	DWG. TYPE	SHOWN ON	SCALE: 1/100	DO NOT SCALE PRINTS
	ASSEM	-	SHEET 8 OF 11	
PATENT CLEAR:	DESIGN ACCT. NO.	CATEGORY CODE	DWG. NO.	SIZE / REV.
	Z5LCE2	LH2001	24C3946	C

DWG. NO. 24C3946 SIZE / REV. C SH. 8

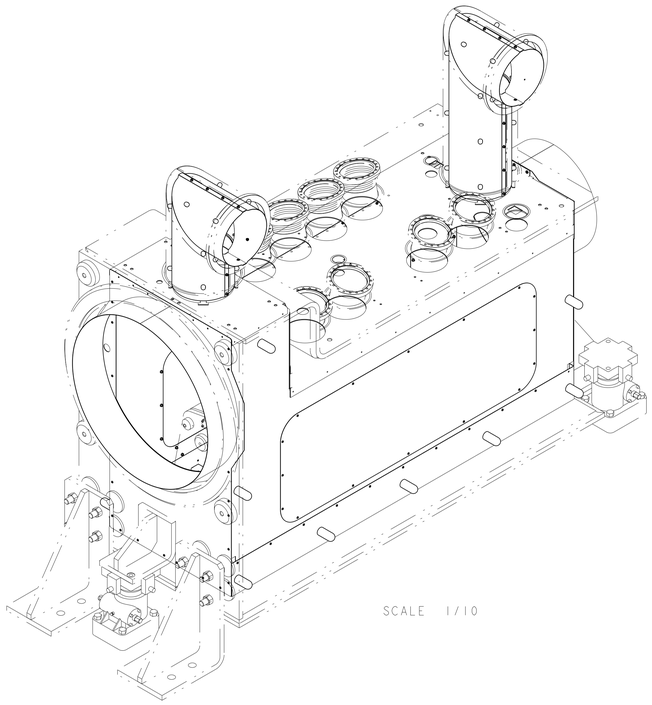

SCALE 1/10

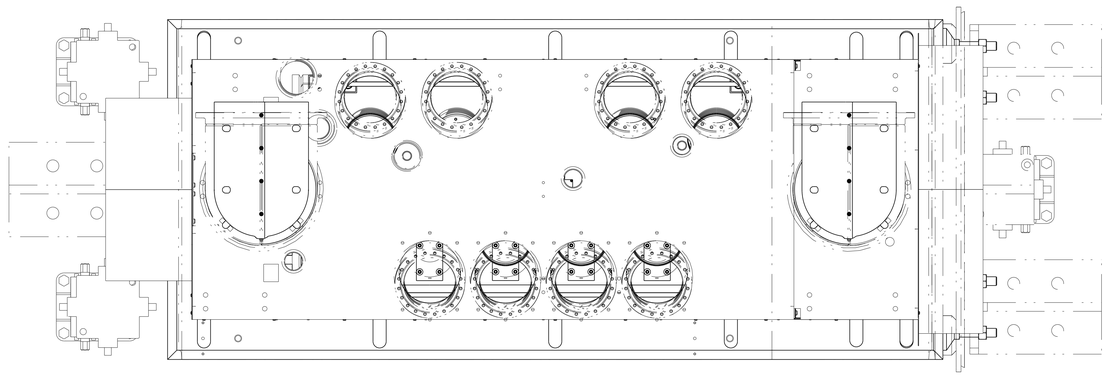

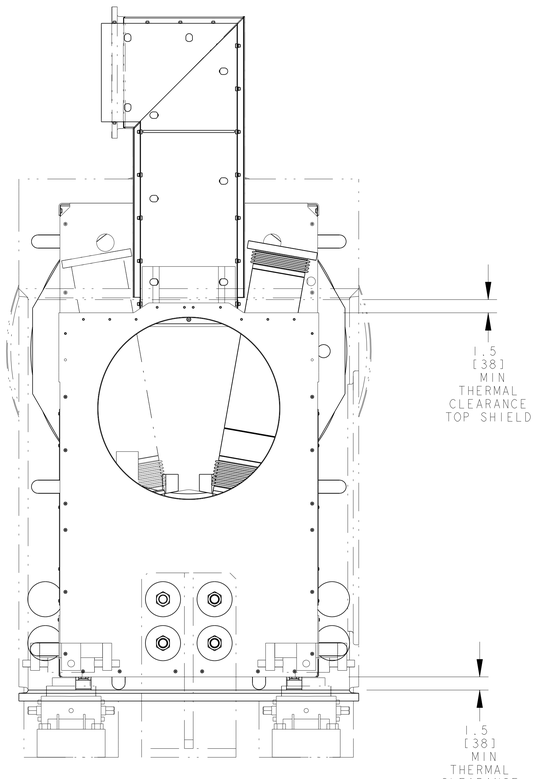

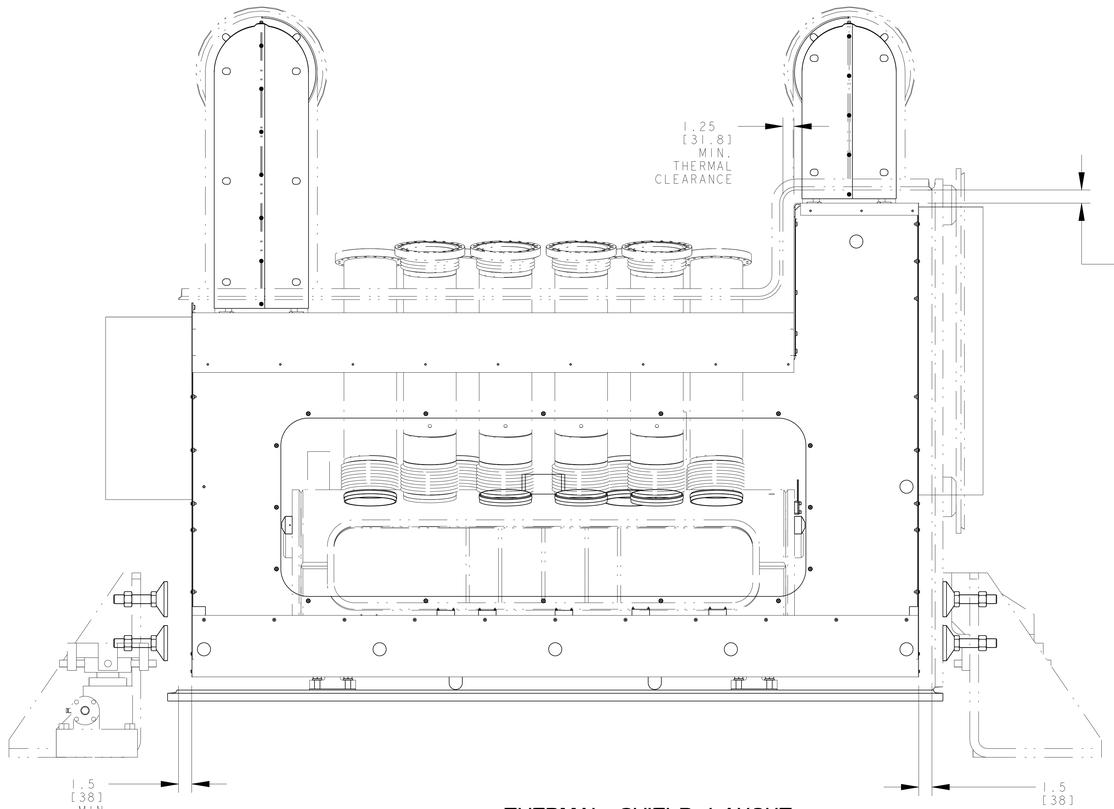

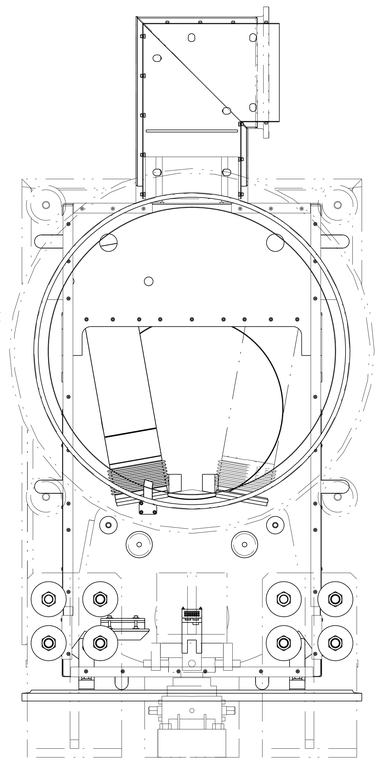

THERMAL SHIELD LAYOUT
COMPONENTS REMOVED FOR CLARITY
SCALE 3/20

THIRD ANGLE PROJECTION

ERNEST ORLANDO LAWRENCE
BERKELEY NATIONAL LABORATORY
UNIVERSITY OF CALIFORNIA · BERKELEY

LHC IR FEEDBOX
MAJOR ASSEMBLY
DFBXE (IP5, LEFT) FEED BOX ASSY

MICROFILMED:	DWG. TYPE	SHOWN ON	SCALE: 1:7/100	DO NOT SCALE PRINTS
	ASSEM	-	SHEET 9 OF 11	
PATENT CLEAR:	DESIGN ACCT. NO.	CATEGORY CODE	DWG. NO.	SIZE / REV.
	Z5LCE2	LH2001	24C3946	C

DWG. NO. 24C3946 SIZE C REV 9

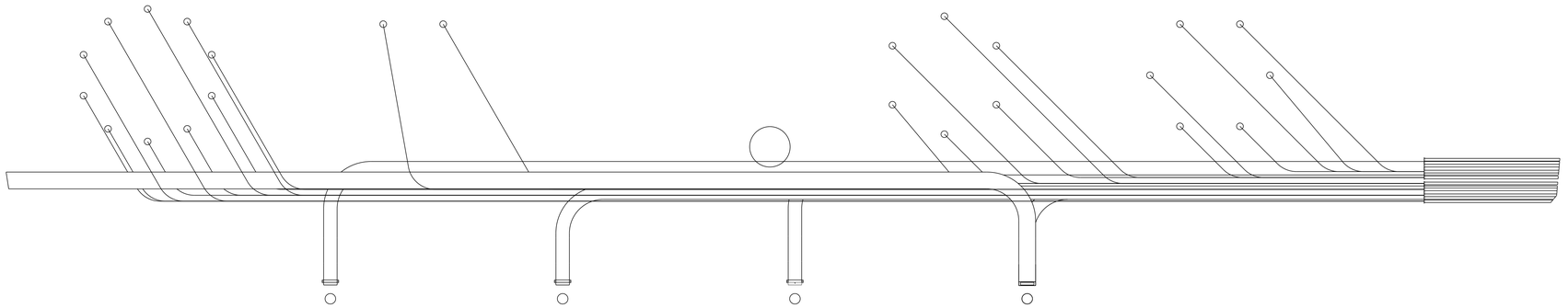

BUS CONDUCTOR RUNS

DETAIL N
SCALE 1/2

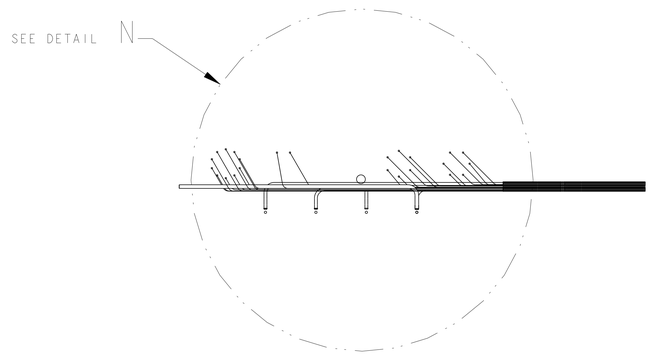

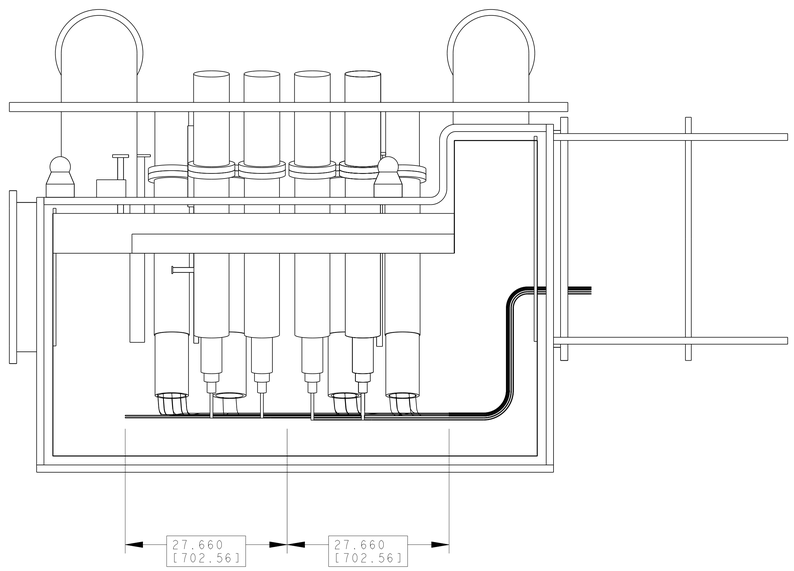

SCALE 1/10

THIRD ANGLE PROJECTION

ERNEST ORLANDO LAWRENCE
BERKELEY NATIONAL LABORATORY
UNIVERSITY OF CALIFORNIA - BERKELEY

LHC IR FEEDBOX
MAJOR ASSEMBLY
DFBXE (IP5, LEFT) FEED BOX ASSY

MICROFILMED:	DWG. TYPE: ASSEM	SHOWN ON: -	SCALE: 1:3/100	DO NOT SCALE PRINTS
			SHEET 10 OF 11	
PATENT CLEAR:	DESIGN ACCT. NO. Z5LCE2	CATEGORY CODE LH2001	DWG. NO. 24C3946	SIZE C / REV.

DWG. NO. 24C3946 SIZE C REV. 10

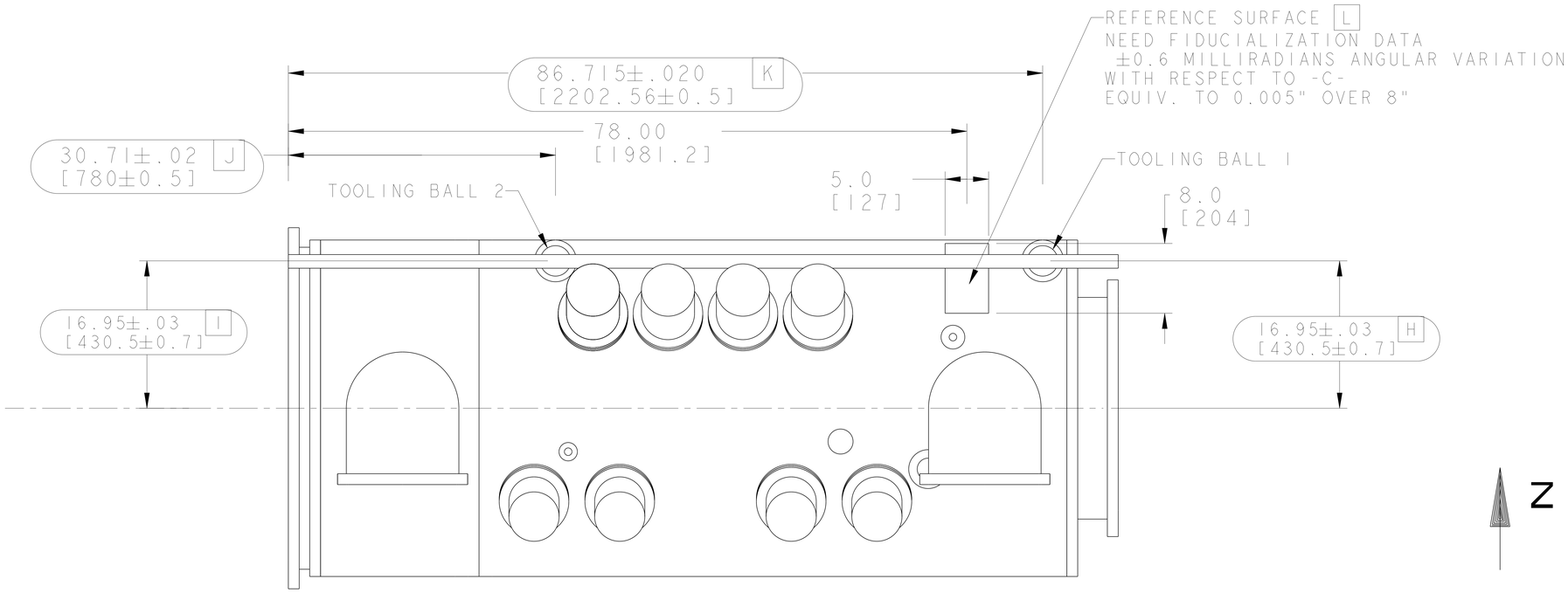

SCALE 1/100

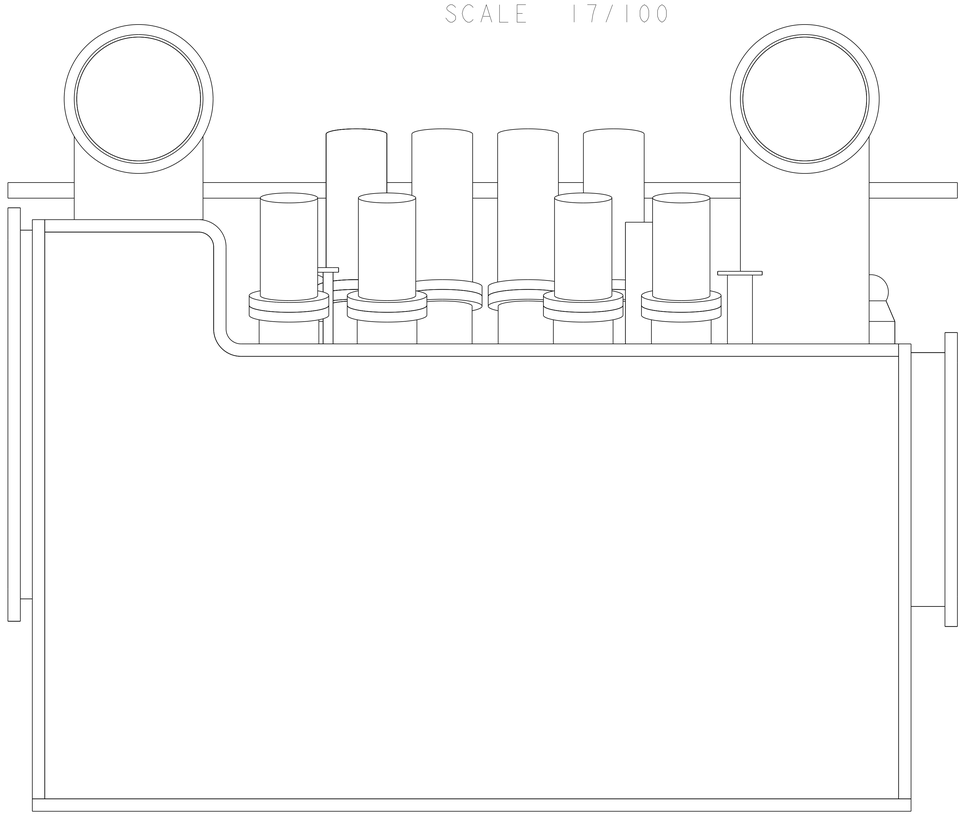

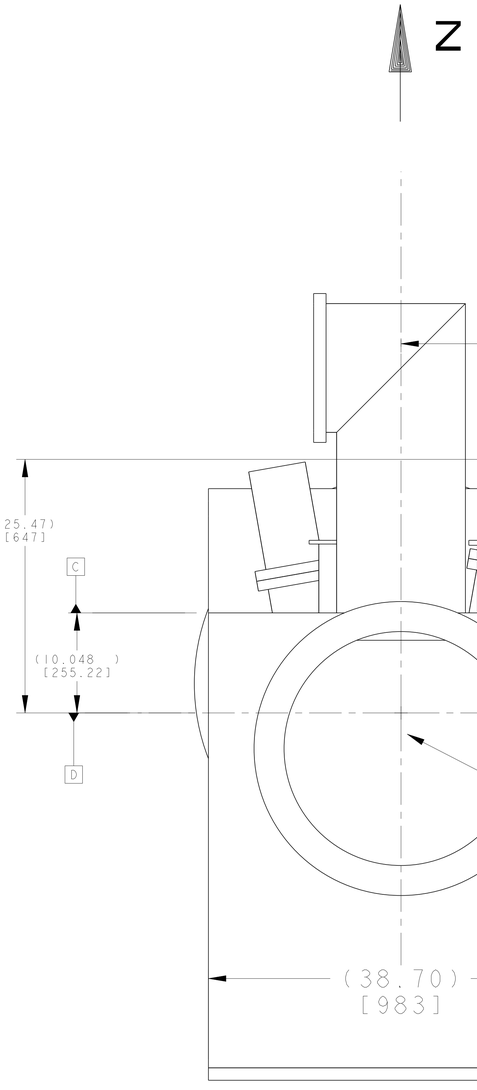

FIDUCIAL LAYOUT INFORMATION

THIRD ANGLE PROJECTION

ERNEST ORLANDO LAWRENCE BERKELEY NATIONAL LABORATORY
UNIVERSITY OF CALIFORNIA - BERKELEY

LHC IR FEEDBOX
MAJOR ASSEMBLY
DFBXE (IP5, LEFT) FEED BOX ASSY

MICROFILMED:	DWG. TYPE: ASSEM	SHOWN ON: -	SCALE: 1/100	DO NOT SCALE PRINTS
			SHEET 11 OF 11	
PATENT CLEAR:	DESIGN ACCT. NO.: Z5LCE2	CATEGORY CODE: LH2001	DWG. NO.: 24C3946	SIZE: C / REV.: C

DWG. NO. 24C3946 SIZE C REV. C