NOTE:
1. DERIVED FROM SPECIFICATION LHC-DFBX-ES-100
2. DERIVED FROM SPECIFICATION LHC-DFBX-ES-200
3. DERIVED FROM SPECIFICATION LHC-DFBX-ES-210
4. DERIVED FROM SPECIFICATION LHC-DFBX-ES-240
5. DERIVED FROM SPECIFICATION LHC-DFBX-ES-260
6. DERIVED FROM SPECIFICATION LHC-DFBX-ES-250
7. DERIVED FROM SPECIFICATION LHC-DFBX-ES-230
8. FILL MOUNTING HOLES WITH EPOXY
9. HTS CURRENT LEAD IN SPECIFICATION M923B

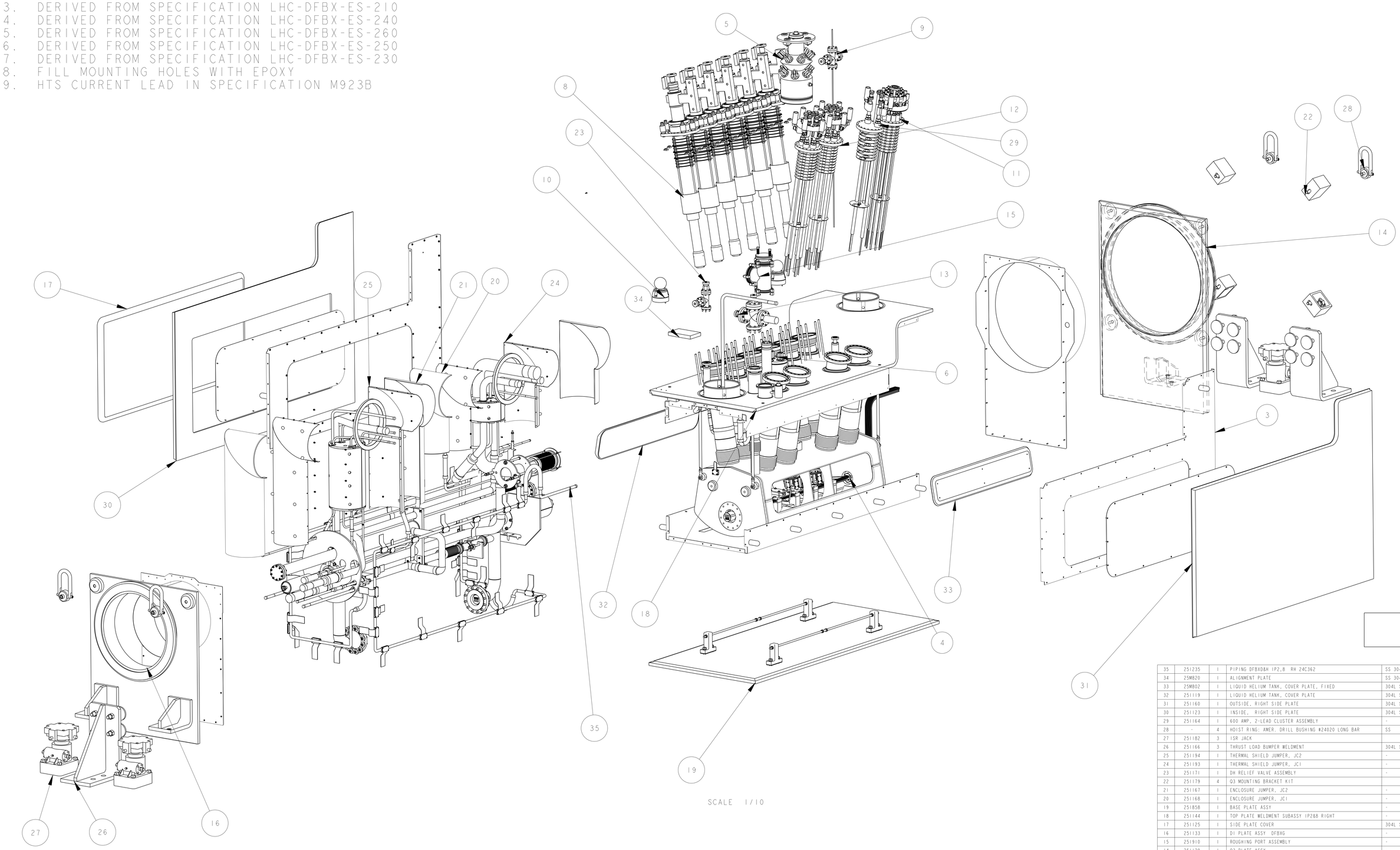

SCALE 1/10

ITEM	PART NO	REQD	DESCRIPTION	MATERIAL
35	251235	1	PIPING DFBXD&H IP2,8 RH 24C362	SS 304L
34	25M820	1	ALIGNMENT PLATE	SS 304L
33	25M802	1	LIQUID HELIUM TANK, COVER PLATE, FIXED	304L SS
32	251119	1	LIQUID HELIUM TANK, COVER PLATE	304L SS
31	251160	1	OUTSIDE, RIGHT SIDE PLATE	304L SS
30	251123	1	INSIDE, RIGHT SIDE PLATE	304L SS
29	251164	1	600 AMP, 2-LEAD CLUSTER ASSEMBLY	-
28	-	4	HOIST RING: AMER. DRILL BUSHING #24020 LONG BAR	SS
27	251182	3	ISR JACK	
26	251166	3	THRUST LOAD BUMPER WELDMENT	304L SS
25	251194	1	THERMAL SHIELD JUMPER, JC2	-
24	251193	1	THERMAL SHIELD JUMPER, JC1	-
23	251171	1	DH RELIEF VALVE ASSEMBLY	-
22	251179	4	Q3 MOUNTING BRACKET KIT	
21	251167	1	ENCLOSURE JUMPER, JC2	-
20	251168	1	ENCLOSURE JUMPER, JC1	-
19	251858	1	BASE PLATE ASSY	-
18	251144	1	TOP PLATE WELDMENT SUBASSY IP2&8 RIGHT	-
17	251125	1	SIDE PLATE COVER	304L SS
16	251133	1	DI PLATE ASSY DFBXG	-
15	251910	1	ROUGHING PORT ASSEMBLY	-
14	251129	1	Q3 PLATE ASSY	-
13	251339	1	HELIUM PORT RELIEF VALVE ASSEMBLY	-
12	24C353	2	600 AMP,6 LEAD VAPOR COOLED ASSY	-
11	24C322	1	120 AMP VC LEAD MOUNTING ASSY	-
10	251868	2	TOOLING BALL, LHCGIMSA00092	-
9	251162	1	LHE DIAGNOSTIC ASSY	-
8	251156	6	PIRELLI HTS LEAD KIT	-
6	251163	1	LBX DIAGNOSTIC ASSY	-
5	251831	1	LQX DIAGONSTIC ASSEMBLY	-
4	251864	1	BUS DUCT ASSEMBLY	-
3	251079	1	THERMAL SHIELD ASSY, DFBXG	-

11. SOLDER JOINT USING SN60PB40 SOLDER; ROSIN FLUX, USE SPLICE PLATE IF REQUIRED
12. CLOSEOUT WELD PROCEDURE TO BE APPROVED BY LBNL
    DISTORTION CONTROL IS ESSENTIAL, ROOT PASS GTAW, COVER PASSES GMAW, SMAW, FCMAW.
13. WELD PROCEDURE TO BE APPROVED BY LBNL, USE GTAW PROCESS
14. BELLOWS TO BE WITHIN 0.03" OF FREE CONFIGURATION AFTER CLOSEOUT WELDING
15. DIMENSIONS FROM DFBX FLANGE FACE ON DI SIDE, ADD -2367.2 MM TO OBTAIN POSITION RELEATIVE TO DFBX COORDINATE SYSTEM
16. SHIM TANK SUPPORTS TO LIMIT STATIC DEFLECTION OF THE LOWER TANK SUPPORT RODS TO LESS THAN 0.25"
17. DIMENSIONS SHOW IN INSPECTION OVAL ARE REFERENCED IN THE FABRICATION TRAVELER
18. COPPER STRAP ATTACHED TO THE THERMAL ANCHORS DO NOT HAVE TO BE EVENLY SPACED.
19. ALL DIMENSIONS GIVEN AT ROOM TEMPERATURE

THIRD ANGLE PROJECTION

REV	DWG	CHK	ZONE	DATE	CHANGES
C	JDR	DPO		03/03/03	CHANGE PIPE END LOCATION CHANGE WELD ON SIDE PLATE COVER
B	JDR	DPO		12/12/02	INITIAL RELEASE
A	JDR	DPO		10/03/02	PRELIMINARY RELEASE

UNLESS OTHERWISE SPECIFIED
TOLERANCES:
X.X ± 0.1 | FRAC. ± 1/64
X.XX ± 0.03 | Angles ± 1.00°
X.XXX ± 0.010 | FINISH 125 µin
DO NOT SCALE PRINT
THREADS ARE CLASS 2
CHAMFER ENDS OF ALL SCREW THREADS 30°
CUT ROUND, 1.5 THREAD RELIEF ON MACHINED THREADS
BREAK EDGES .016 MAX. ON MACHINED WORK
REMOVE BURRS, WELD SPATTER & LOOSE SCALE
IN ACCORDANCE WITH ASME Y14.5M & ENL.1

SHOP ORDERS
ACCT NO. | REQD NO. | DEV NO. | DATE
DEL TO | DATE
REQD | DATE
SURFACE TREATMENT
IDENT METHOD | TAG
PROJECT NUMBER
PROJECT NAME N/A
DWG BY M.J.KNOLLS | DATE 02-Nov-01
CHK BY Jon Zbasnik | DATE 03-OCT-02
APR BY Jon Zbasnik | DATE 03-OCT-02

ERNEST ORLANDO LAWRENCE
BERKELEY NATIONAL LABORATORY
UNIVERSITY OF CALIFORNIA - BERKELEY

LHC IR FEEDBOX
MAJOR ASSEMBLY
DFBXD, DFBXH, (IP2&8, RIGHT) FEED BOX ASSY

MICROFILMED: | PATENT CLEAR:
DWG. TYPE: ASSEM | SHOWN ON: - | SCALE: 1:3/100 | DO NOT SCALE PRINTS
SHEET 1 OF 11
DESIGN ACCT. NO.: Z5LCE2 | CATEGORY CODE: LH2001 | DWG. NO.: 24C3626 | SIZE: C | REV.:

DWG. NO. 24C3626 C 1

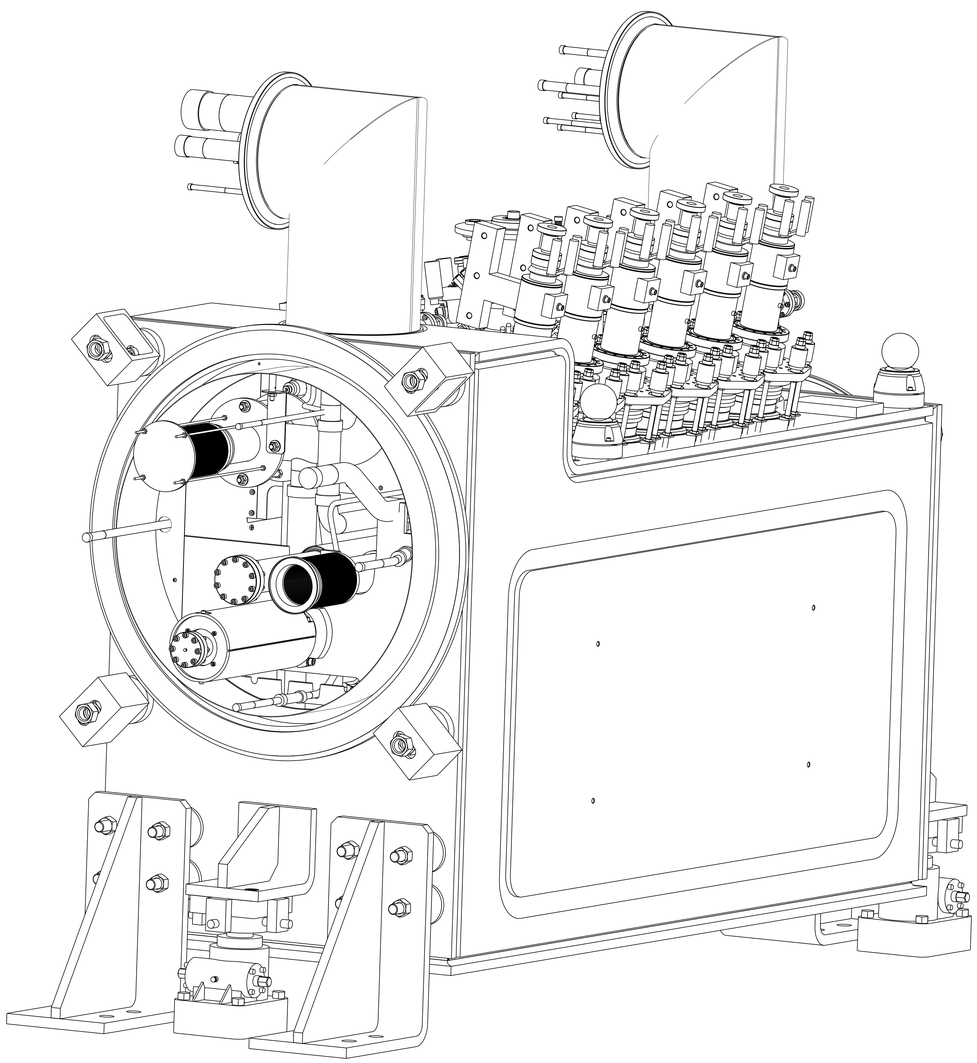

Q3 END

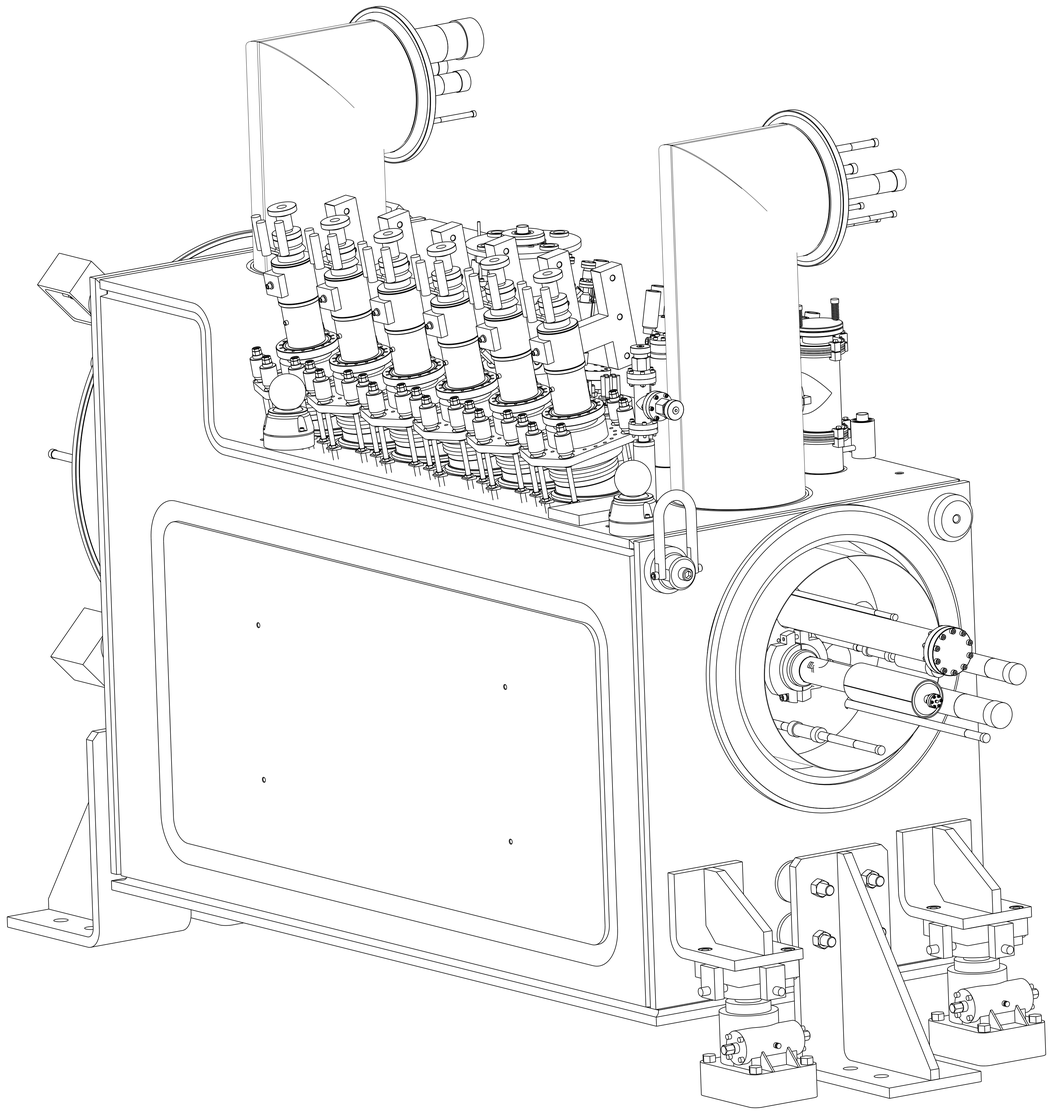

D1 END

DFBXD, IP2 (RIGHT)
DFBXH, IP8 (RIGHT)

THIRD ANGLE PROJECTION

ERNEST ORLANDO LAWRENCE
BERKELEY NATIONAL LABORATORY
UNIVERSITY OF CALIFORNIA - BERKELEY

LHC IR FEEDBOX
MAJOR ASSEMBLY
DFBXD, DFBXH, (IP2&8, RIGHT) FEED BOX ASSY

MICROFILMED:	DWG. TYPE	SHOWN ON	SCALE: 9/50	DO NOT SCALE PRINTS
	ASSEM	-	SHEET 2 OF 11	
PATENT CLEAR:	DESIGN ACCT. NO.	CATEGORY CODE	DWG. NO.	SIZE / REV.
	Z5LCE2	LH2001	24C3626	C

DWG. NO. 24C3626 SIZE C REV. 2

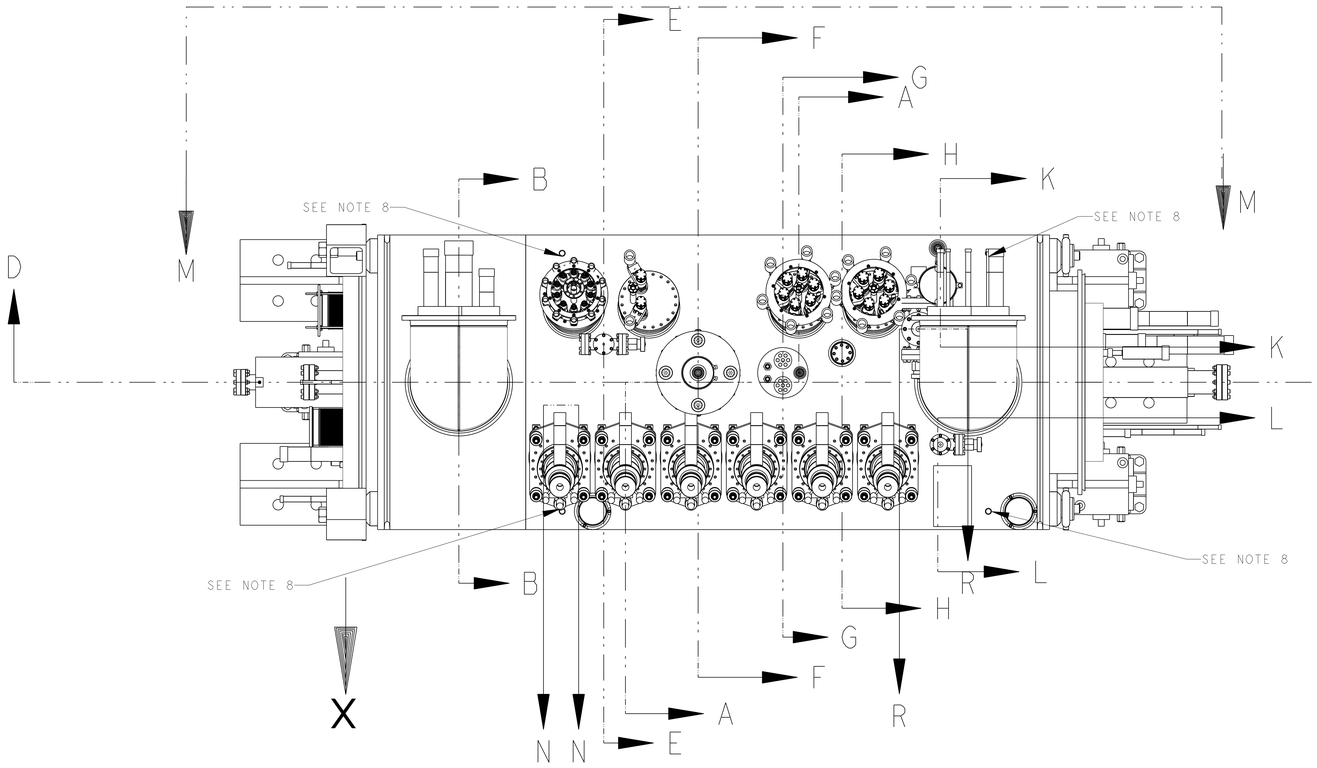

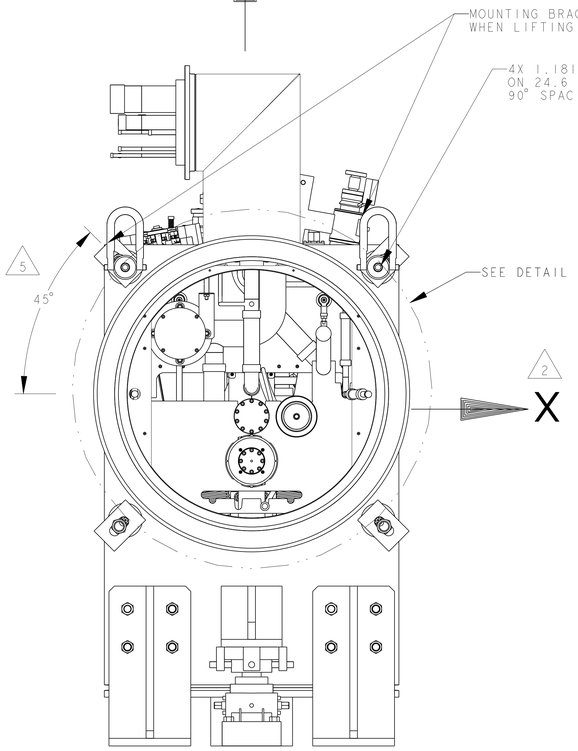

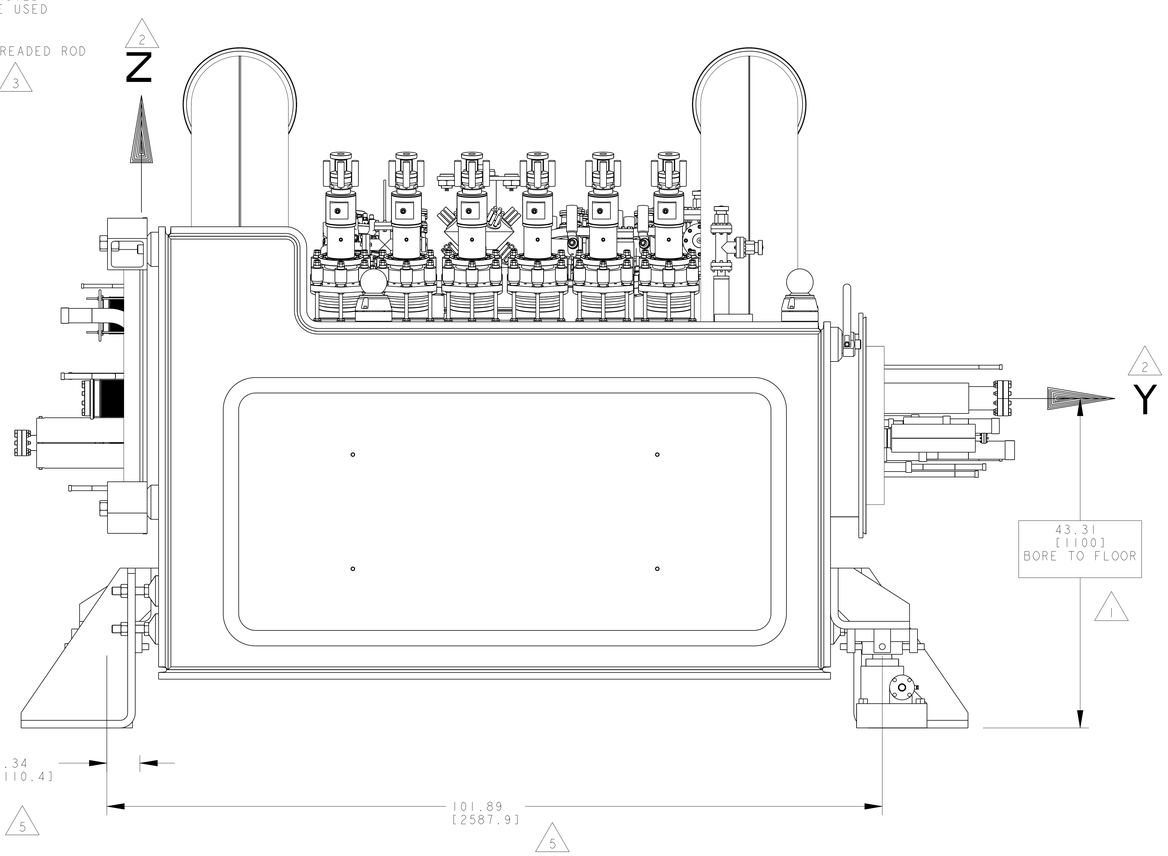

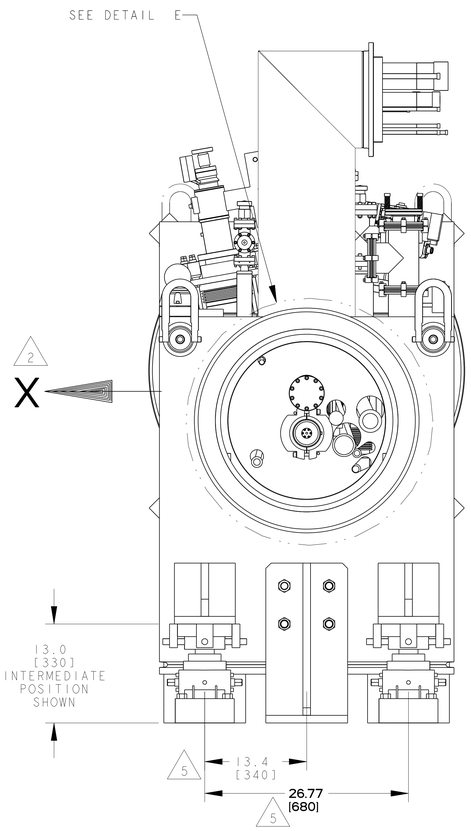

THIRD ANGLE PROJECTION

ERNEST ORLANDO LAWRENCE BERKELEY NATIONAL LABORATORY
UNIVERSITY OF CALIFORNIA - BERKELEY

LHC IR FEEDBOX
MAJOR ASSEMBLY
DFBXD, DFBXH, (IP2&8, RIGHT) FEED BOX ASSY

MICROFILMED:	DWG. TYPE	SHOWN ON	SCALE: 1:3/100	DO NOT SCALE PRINTS
	ASSEM	-	SHEET 3 OF 11	
PATENT CLEAR:	DESIGN ACCT. NO.	CATEGORY CODE	DWG. NO.	SIZE / REV.
	Z5LCE2	LH2001	24C3626	C

DWG. NO. 24C3626 | SIZE | REV. C | SH. 3

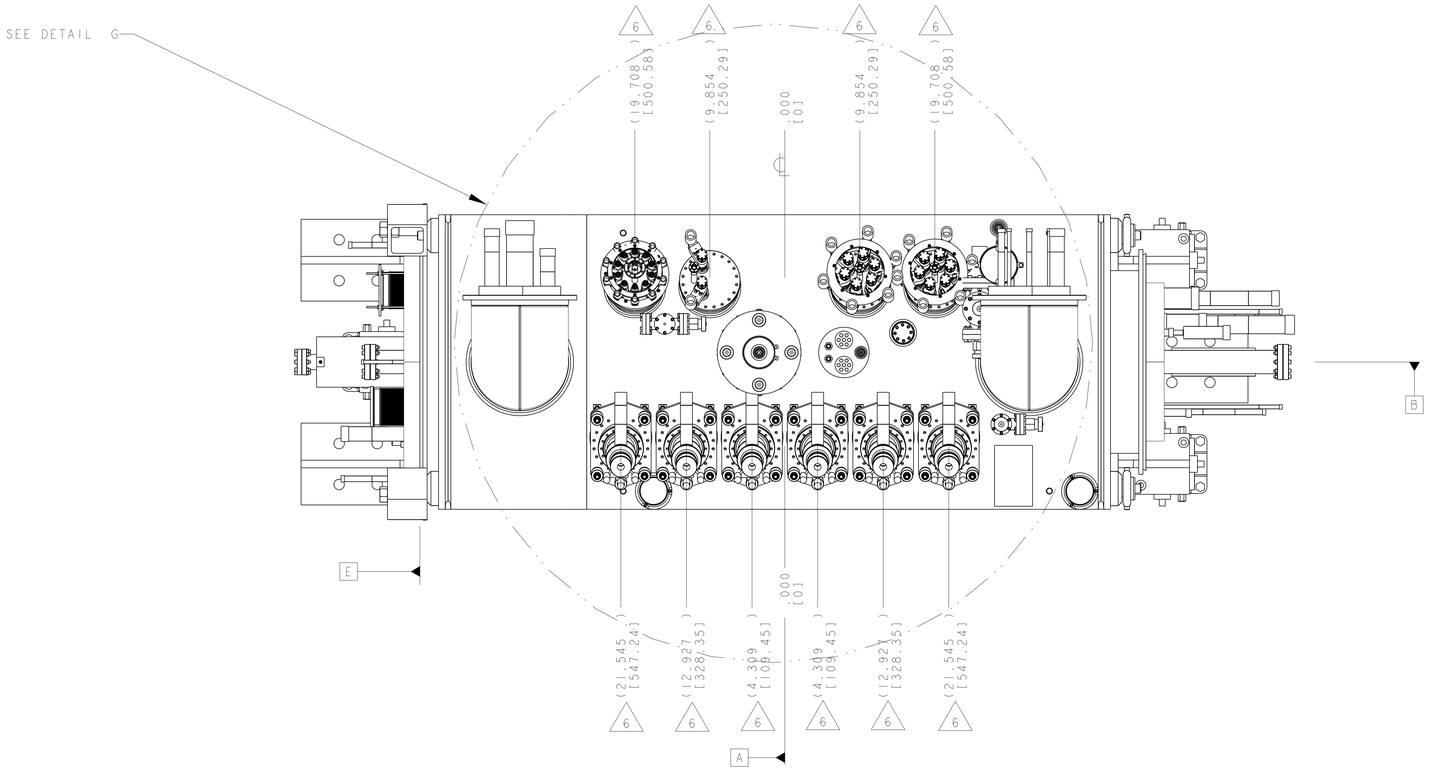

SECTION D - D
SCALE 13/100

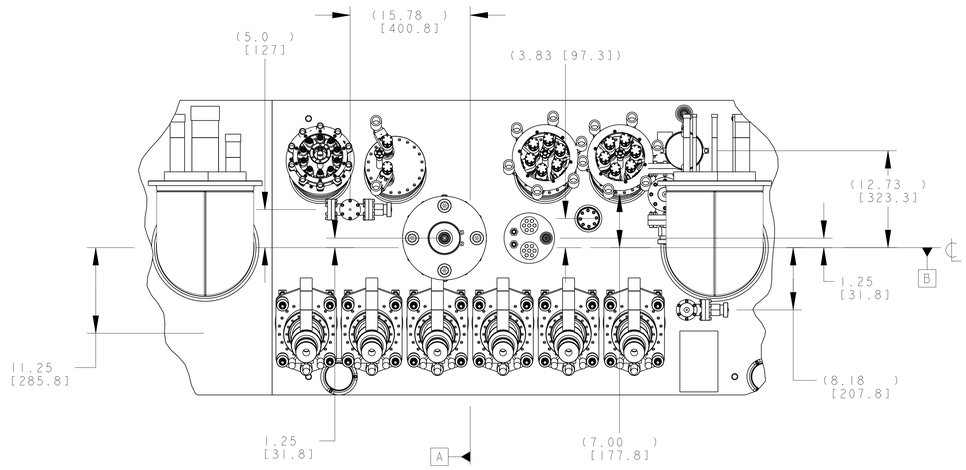

DETAIL G
SCALE 13/100

THIRD ANGLE PROJECTION

ERNEST ORLANDO LAWRENCE BERKELEY NATIONAL LABORATORY, UNIVERSITY OF CALIFORNIA - BERKELEY				
LHC IR FEEDBOX MAJOR ASSEMBLY DFBXD, DFBXH, (IP2&8, RIGHT) FEED BOX ASSY				
MICROFILMED:	DWG. TYPE: ASSEM	SHOWN ON: -	SCALE: 13/100	DO NOT SCALE PRINTS
			SHEET 4 OF 11	
PATENT CLEAR:	DESIGN ACCT. NO.: Z5LCE2	CATEGORY CODE: LH2001	DWG. NO.: 24C3626	SIZE: C / REV.: C

DWG. NO. 24C3626 SIZE C REV. 4

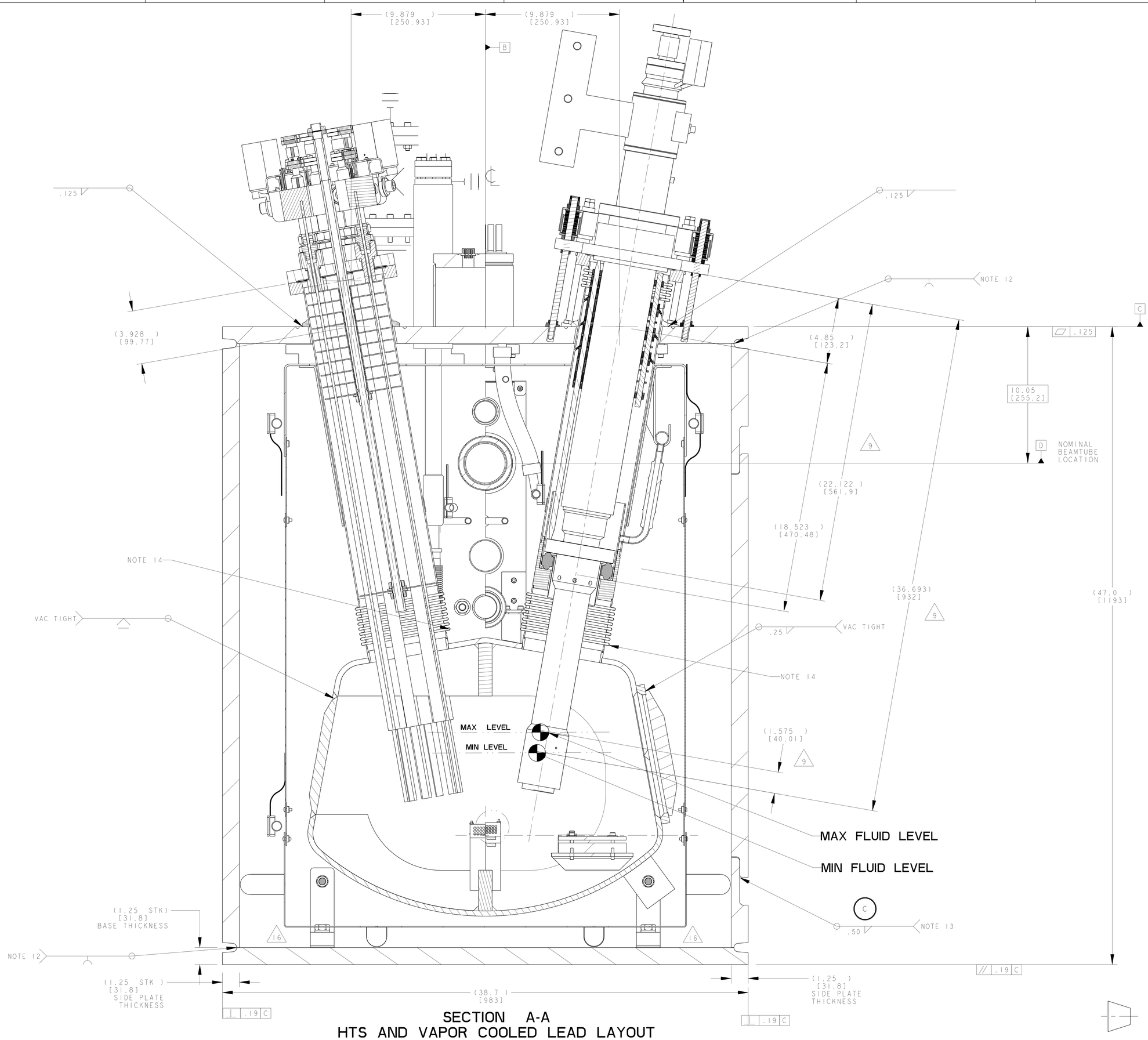

SECTION A-A
HTS AND VAPOR COOLED LEAD LAYOUT
SCALE 2/5

THIRD ANGLE PROJECTION

ERNEST ORLANDO LAWRENCE
BERKELEY NATIONAL LABORATORY
UNIVERSITY OF CALIFORNIA - BERKELEY

LHC IR FEEDBOX
MAJOR ASSEMBLY
DFBXD, DFBXH, (IP2&8, RIGHT) FEED BOX ASSY

MICROFILMED:	DWG. TYPE	SHOWN ON	SCALE: 13/100	DO NOT SCALE PRINTS
	ASSEM	-	SHEET 5 OF 11	
PATENT CLEAR:	DESIGN ACCT. NO.	CATEGORY CODE	DWG. NO.	SIZE / REV.
	Z5LCE2	LH2001	24C3626	C

DWG. NO. 24C3626 SIZE C REV. 5

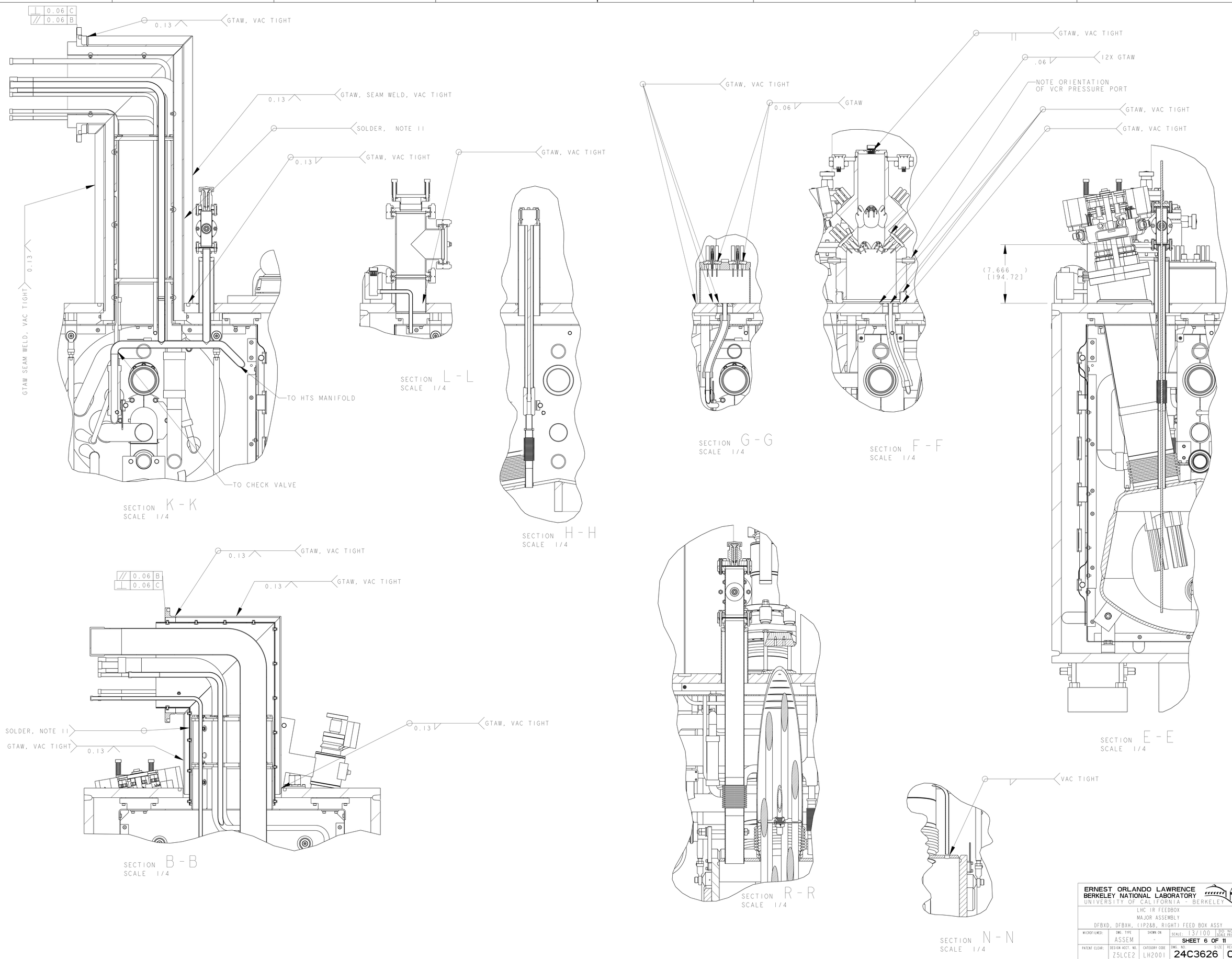

ERNEST ORLANDO LAWRENCE
BERKELEY NATIONAL LABORATORY
UNIVERSITY OF CALIFORNIA - BERKELEY

LHC IR FEEDBOX
MAJOR ASSEMBLY
DFBXD, DFBXH, (IP2&8, RIGHT) FEED BOX ASSY

MICROFILMED:	DWG. TYPE	SHOWN ON	SCALE: 13/100	DO NOT SCALE PRINTS
	ASSEM	-	SHEET 6 OF 11	
PATENT CLEAR:	DESIGN ACCT. NO.	CATEGORY CODE	DWG. NO.	SIZE / REV.
	Z5LCE2	LH2001	24C3626	C

DWG. NO. 24C3626 SIZE C REV. 6

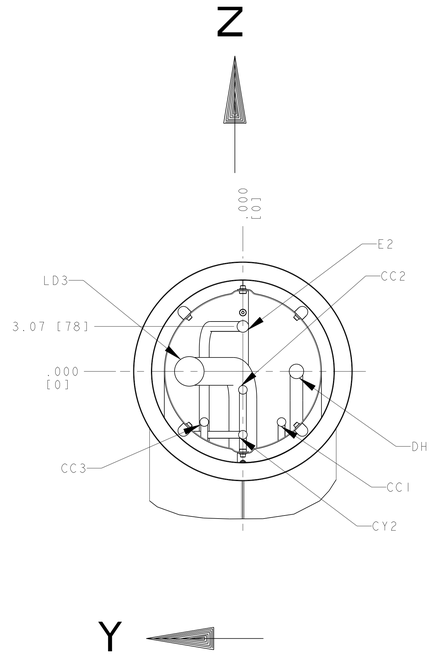

		DIM'S MEASURED FROM FLANGE CENTER	
PIPE	X	Y ±0.08	Z ±0.08
E2	-14.45±.08 [367±2]	0	3.07 [78]
DH	-14.45±.08 [367±2]	-3.66 [93]	0
LD3	-14.45±.08 [367±2]	3.66 [93]]	0
CC2	-14.45±.08 [367±2]	0	-1.26 [32]
CC1	-14.45±.08 [367±2]	-2.64 [67]	-3.46 [88]
CC3	-14.45±.08 [367±2]	2.64 [67]	-3.46 [88]
CY2	-14.45±.08 [367±2]	0	-4.33 [110]

4

DETAIL D
JC2 / QQSD
DIMENSIONAL TOLERANCE ± 0.08
ORIENTATION OPPOSITE OF SPECIFICATION 240
SCALE 1/4

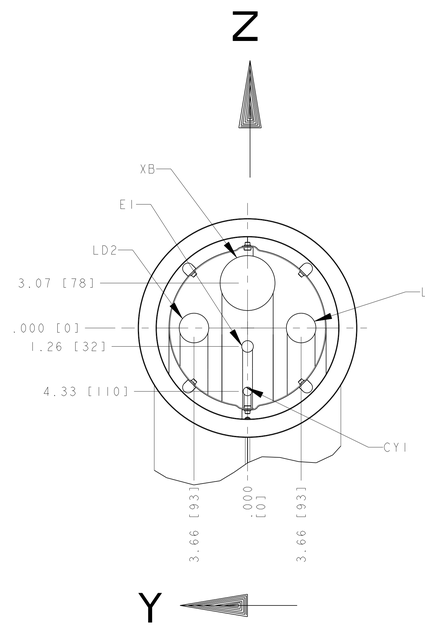

		DIM'S MEASURED FROM FLANGE CENTER	
PIPE	X	Y ±0.08	Z ±0.08
XB	-14.45±.08 [367±2]	0	3.07 [78]
LD2	-14.45±.08 [367±2]	3.66 [93]	0
LD1	-14.45±.08 [367±2]	-3.66 [93]	0
E1	-14.45±.08 [367±2]	0	-1.26 [32]
CY1	-14.45±.08 [367±2]	0	-4.33 [110]

4

DETAIL C
JC1 / QQSC
DIMENSIONAL TOLERANCE ± 0.08
ORIENTATION OPPOSITE OF SPECIFICATION 240
SCALE 1/4

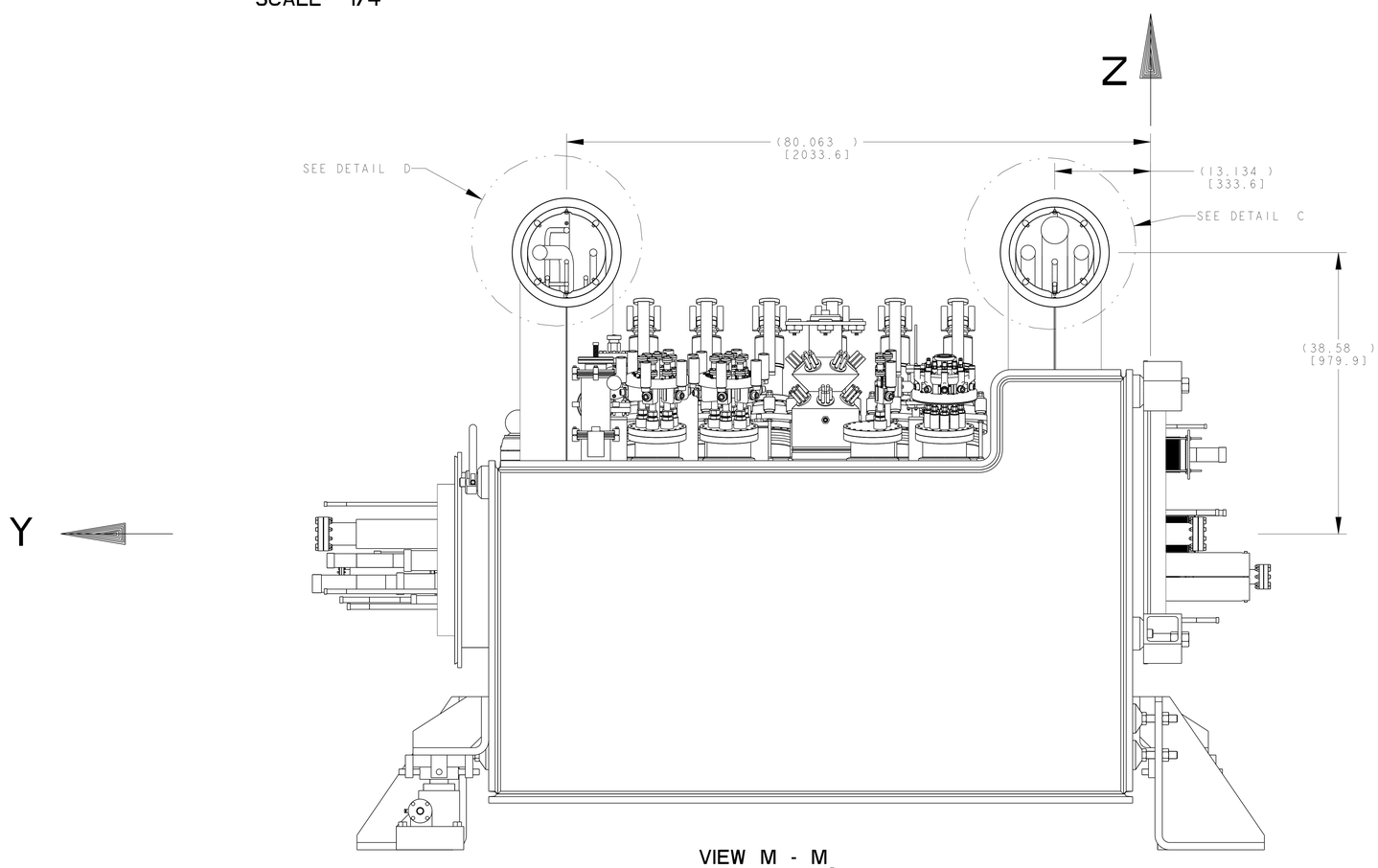

VIEW M - M
ROTATED 180°

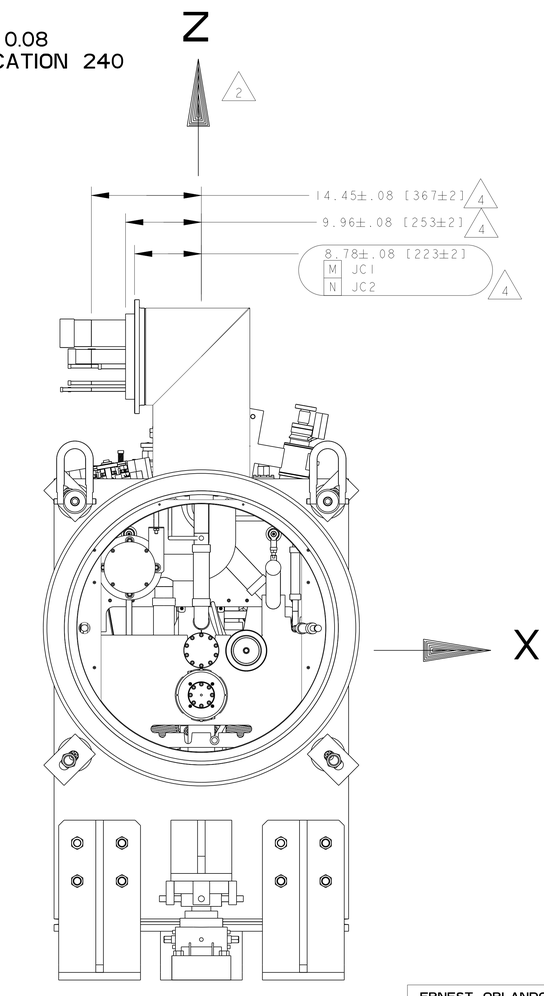

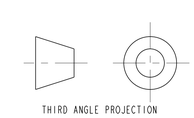

THIRD ANGLE PROJECTION

ERNEST ORLANDO LAWRENCE
BERKELEY NATIONAL LABORATORY
UNIVERSITY OF CALIFORNIA - BERKELEY

LHC IR FEEDBOX
MAJOR ASSEMBLY
DFBXD, DFBXH, (IP2&8, RIGHT) FEED BOX ASSY

MICROFILMED:	DWG. TYPE	SHOWN ON	SCALE: 13/100	DO NOT SCALE PRINTS
	ASSEM	-	SHEET 7 OF 11	
PATENT CLEAR:	DESIGN ACCT. NO.	CATEGORY CODE	DWG. NO.	SIZE / REV.
	Z5LCE2	LH2001	24C3626	C

DWG. NO. 24C3626 SIZE C REV. 7

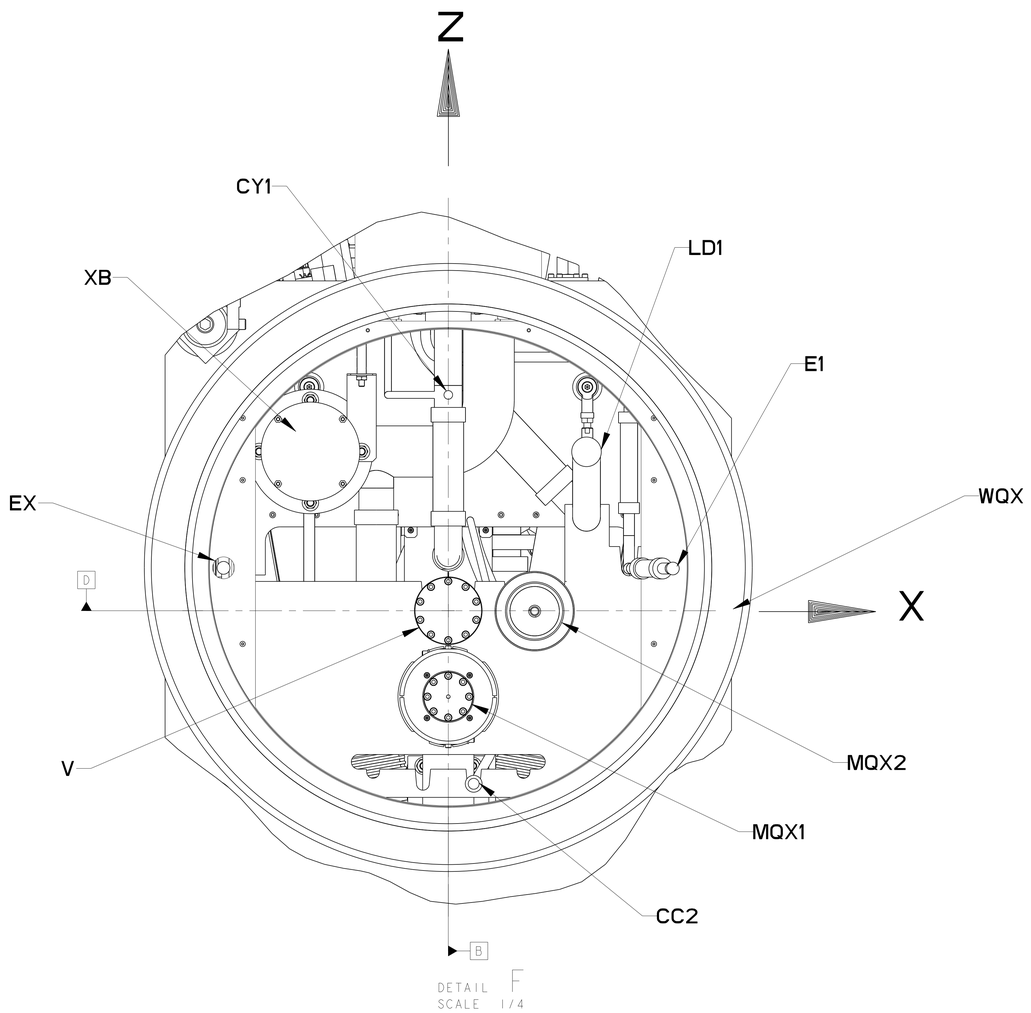

DETAIL F
SCALE 1/4

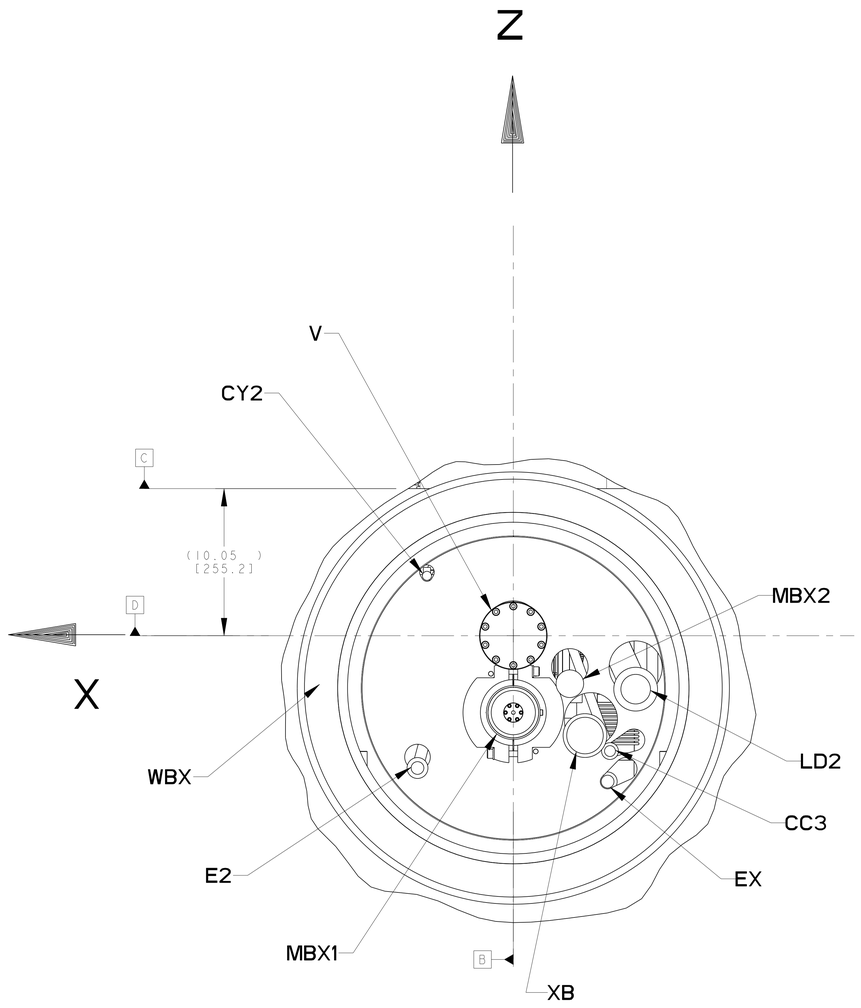

DETAIL E
SCALE 1/4

C

C

Q3 PIPING INTERFACE
PER SPEC. LHC-DFBX-ES-210.00 REV 1.0

DFBX	PIPE OD/ID		PIPE COORDINATES AT 300 K		
DFBX	OD in [mm]	ID in [mm]	X in [mm] ±.08	Z in [mm] ±.08	Y in [mm] ±.08
V	3.071 [78]	2.913 [73.99]	.000 [0]	.000 [0]	-2.032 [-51.61]
LD1	1.748 [44.4]	1.650 [41.91]	9.444 [239.88]	10.855 [275.72]	-6.299 [-159.99]
CC2	.626 [15.9]	.528 [13.41]	1.735 [44.07]	-11.822 [-300.28]	-6.299 [-159.99]
CY1	.626 [15.9]	.528 [13.41]	.000 [0]	14.742 [374.45]	-3.617 [-91.87]
E1	1.500 [38.1]	1.370 [34.8]	15.345 [389.76]	2.885 [73.28]	-6.299 [-159.99]
EX	1.500 [38.1]	1.370 [34.8]	-15.355 [-390.02]	2.929 [74.4]	-6.299 [-159.99]
MQX1	3.500 [88.9]	3.370 [85.6]	.000 [0]	-5.871 [-149.12]	-6.299 [-159.99]
MQX2	3.500 [88.9]	3.370 [85.6]	5.902 [149.91]	-.031 [-0.79]	-6.299 [-159.99]
WQX	41.535 [1055]	35.039 [890]	.000 [0]	2.953 [75.01]	.000 [0]
XB	3.500 [88.9]	3.370 [85.6]	-9.420 [-239.27]	10.876 [276.25]	-5.118 [-130]

D1 PIPING INTERFACE
PER SPEC. LHC-DFBX-ES-230.00 REV 1.1

	PIPE OD/ID		PIPE COORDINATES AT 300 K		
DFBX	OD in [mm]	ID in [mm]	X in [mm] ±.08	Z in [mm] ±.08	Y in [mm] ±.08
V	3.06 [77.7]	2.91 [73.9]	.000 [0]	.000 [0]	13.504 [343]
LD2	1.75 [44.5]	1.66 [42.2]	-8.359 [-212.32]	-3.650 [-92.71]	13.465 [342.01]
CC3	.63 [16]	.53 [13.5]	-6.604 [-167.74]	-7.879 [-200.13]	14.843 [377.01]
CY2 END TRANSITION	.63 [16] .50 [12.7]	.53 [13.5] .41 [10.4]	5.901 [149.89]	4.091 [103.91]	14.843 [377.01]
Ex	1.50 [38.1]	1.38 [35.1]	-6.441 [-163.6]	-9.963 [-253.06]	11.693 [297]
E2	1.50 [38.1]	1.38 [35.1]	6.546 [166.27]	-9.036 [-229.51]	11.693 [297]
MBX1	3.50 [88.9]	3.38 [85.9]	.000 [0]	-5.249 [-133.32]	3.780 [96.01]
MBX2 END TRANSITION	.50 [12.7] 1.47 [37.3]	.38 [9.7] 1.34 [34]	-3.862 [-98.09]	-3.279 [-83.29]	5.465 [138.81]
WBX	29.53 [750.1]	23.50 [596.9]	.000 [0]	-3.528 [-89.61]	.000 [0]
XB END TRANSITION	2.88 [73.2] 2.00 [50.8]	2.72 [69.1] 1.88 [47.8]	-4.896 [-124.36]	-6.819 [-173.2]	13.465 [342.01]

△5

THIRD ANGLE PROJECTION

ERNEST ORLANDO LAWRENCE BERKELEY NATIONAL LABORATORY
UNIVERSITY OF CALIFORNIA - BERKELEY

LHC IR FEEDBOX
MAJOR ASSEMBLY
DFBXD, DFBXH, (IP2&8, RIGHT) FEED BOX ASSY

MICROFILMED:	DWG. TYPE: ASSEM	SHOWN ON: -	SCALE: 1/3/100	DO NOT SCALE PRINTS
			SHEET 8 OF 11	
PATENT CLEAR:	DESIGN ACCT. NO.: Z5LCE2	CATEGORY CODE: LH2001	DWG. NO.: 24C3626	SIZE: C / REV.

DWG. NO. 24C3626 | SHT. 8 | REV. C

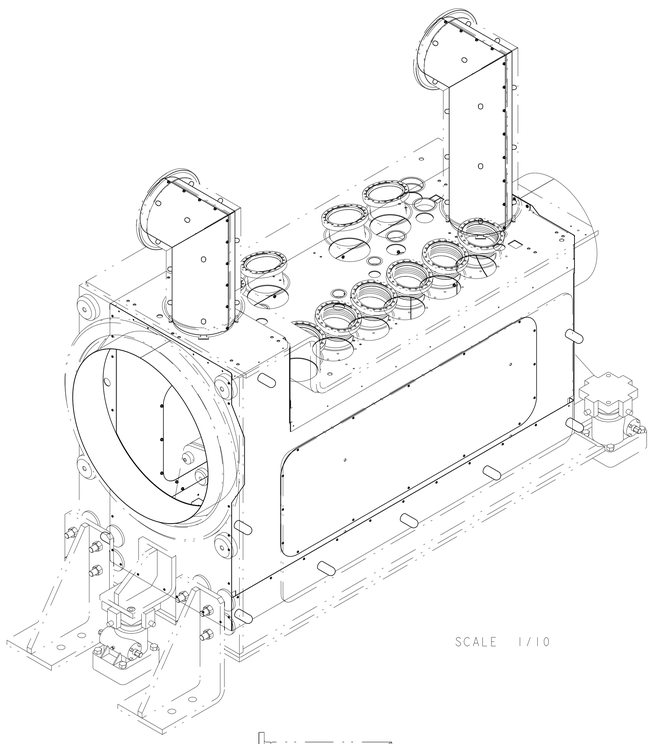

SCALE 1/10

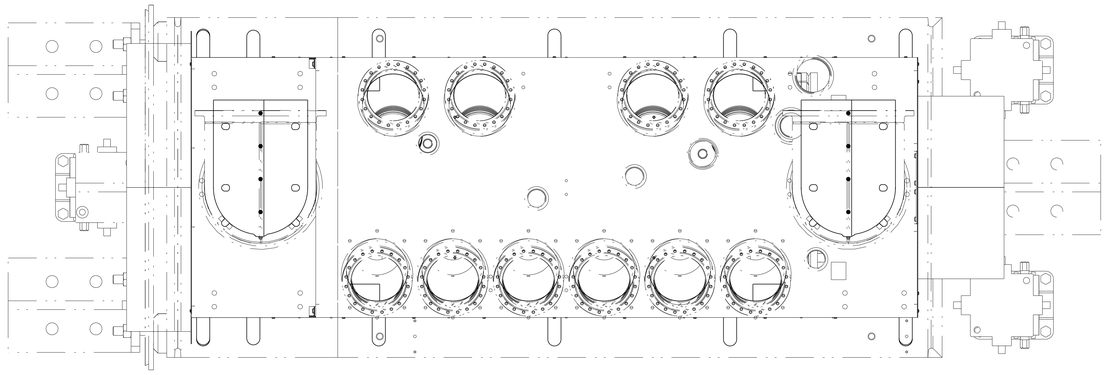

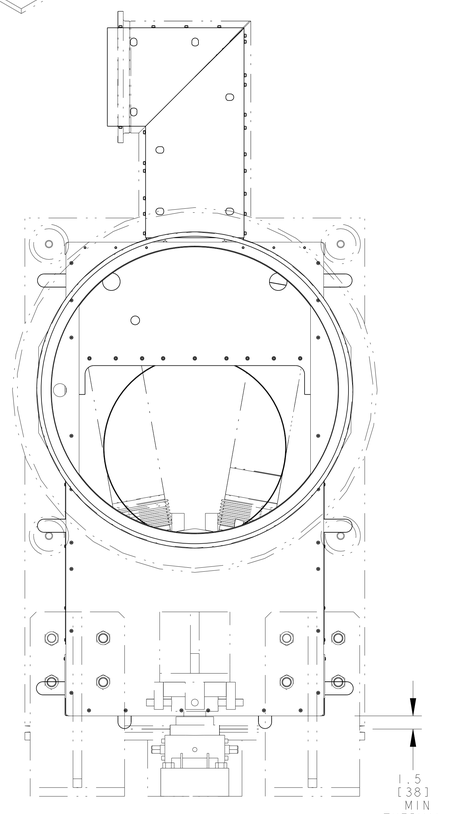

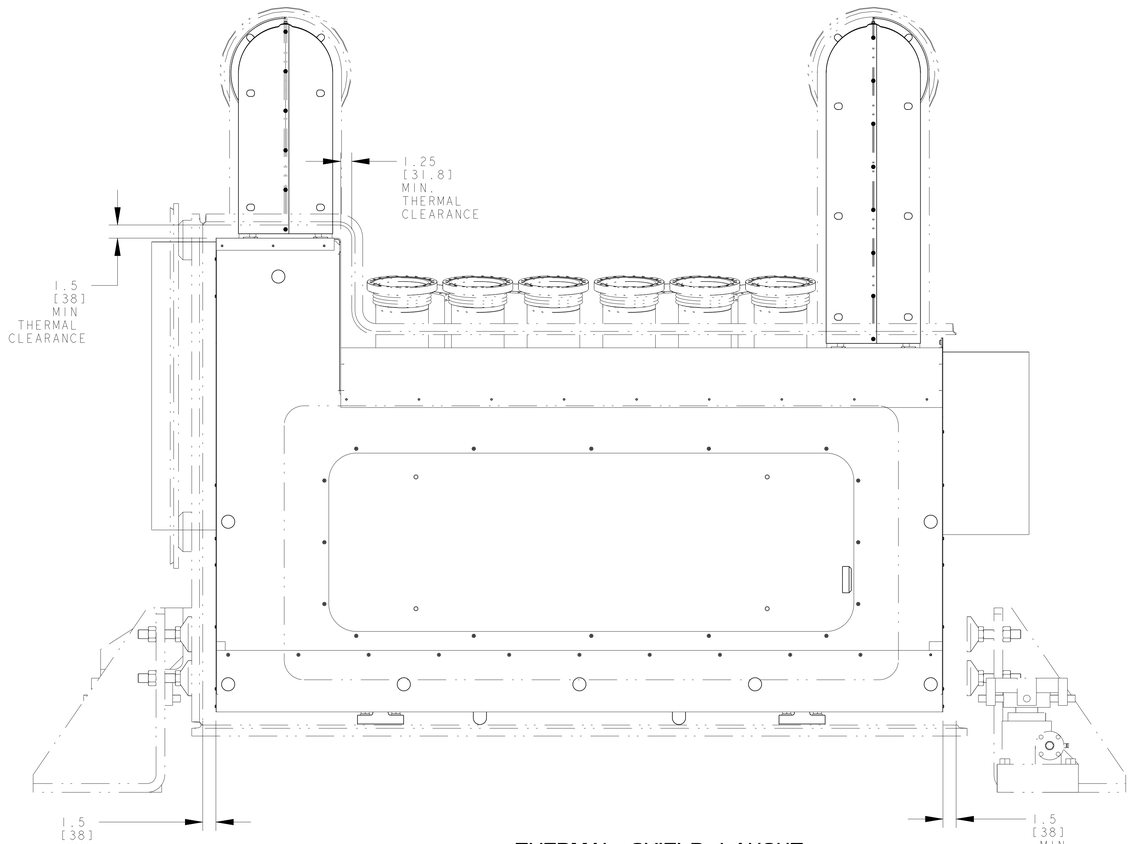

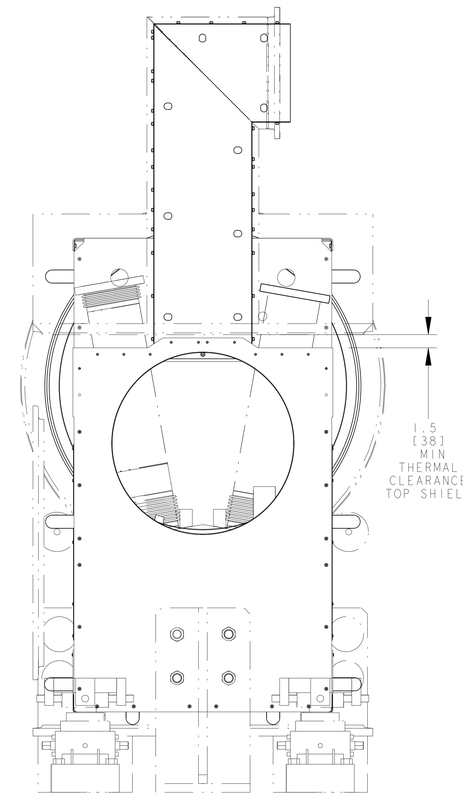

THERMAL SHIELD LAYOUT
COMPONENTS REMOVED FOR CLARITY
SCALE 3/20

THIRD ANGLE PROJECTION

ERNEST ORLANDO LAWRENCE
BERKELEY NATIONAL LABORATORY
UNIVERSITY OF CALIFORNIA - BERKELEY

LHC IR FEEDBOX
MAJOR ASSEMBLY
DFBXD, DFBXH, (IP2&8, RIGHT) FEED BOX ASSY

MICROFILMED:	DWG. TYPE	SHOWN ON	SCALE: 1:7/100	DON NOT SCALE PRINTS
	ASSEM	-	SHEET 9 OF 11	
PATENT CLEAR:	DESIGN ACCT. NO.	CATEGORY CODE	DWG. NO.	SIZE / REV.
	Z5LCE2	LH2001	24C3626	C

DWG. NO. 24C3626 SHEET 9 OF 11

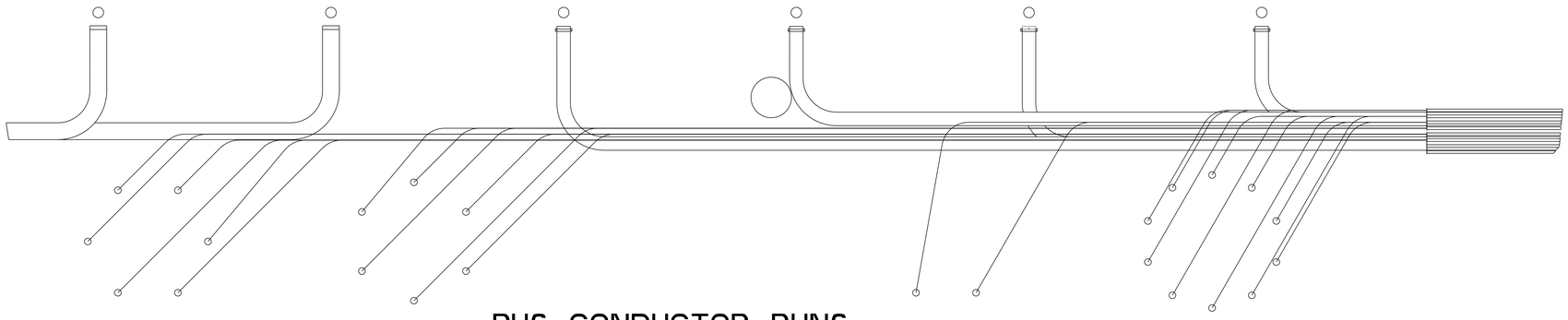

BUS CONDUCTOR RUNS

DETAIL N
SCALE 1/2

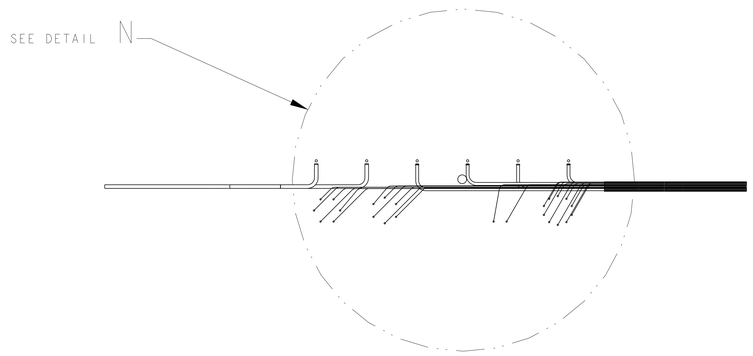

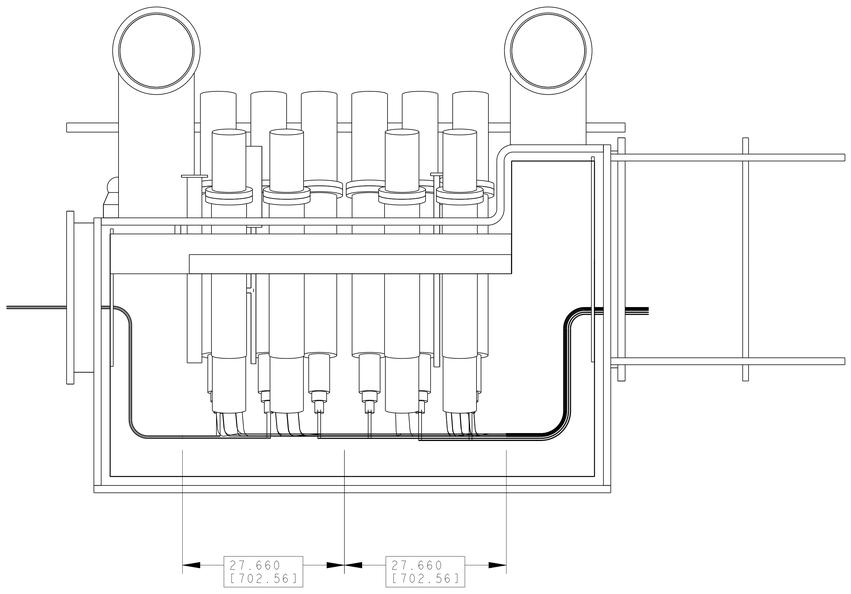

SCALE 1/10

THIRD ANGLE PROJECTION

ERNEST ORLANDO LAWRENCE
BERKELEY NATIONAL LABORATORY
UNIVERSITY OF CALIFORNIA - BERKELEY

LHC IR FEEDBOX
MAJOR ASSEMBLY
DFBXD, DFBXH, (IP2&8, RIGHT) FEED BOX ASSY

MICROFILMED:	DWG. TYPE: ASSEM	SHOWN ON: -	SCALE: 1/100 DO NOT SCALE PRINTS
			SHEET 10 OF 11
PATENT CLEAR:	DESIGN ACCT. NO. Z5LCE2	CATEGORY CODE LH2001	DWG. NO. 24C3626 SIZE D REV. C

DWG. NO. 24C3626 SIZE D REV. C 10

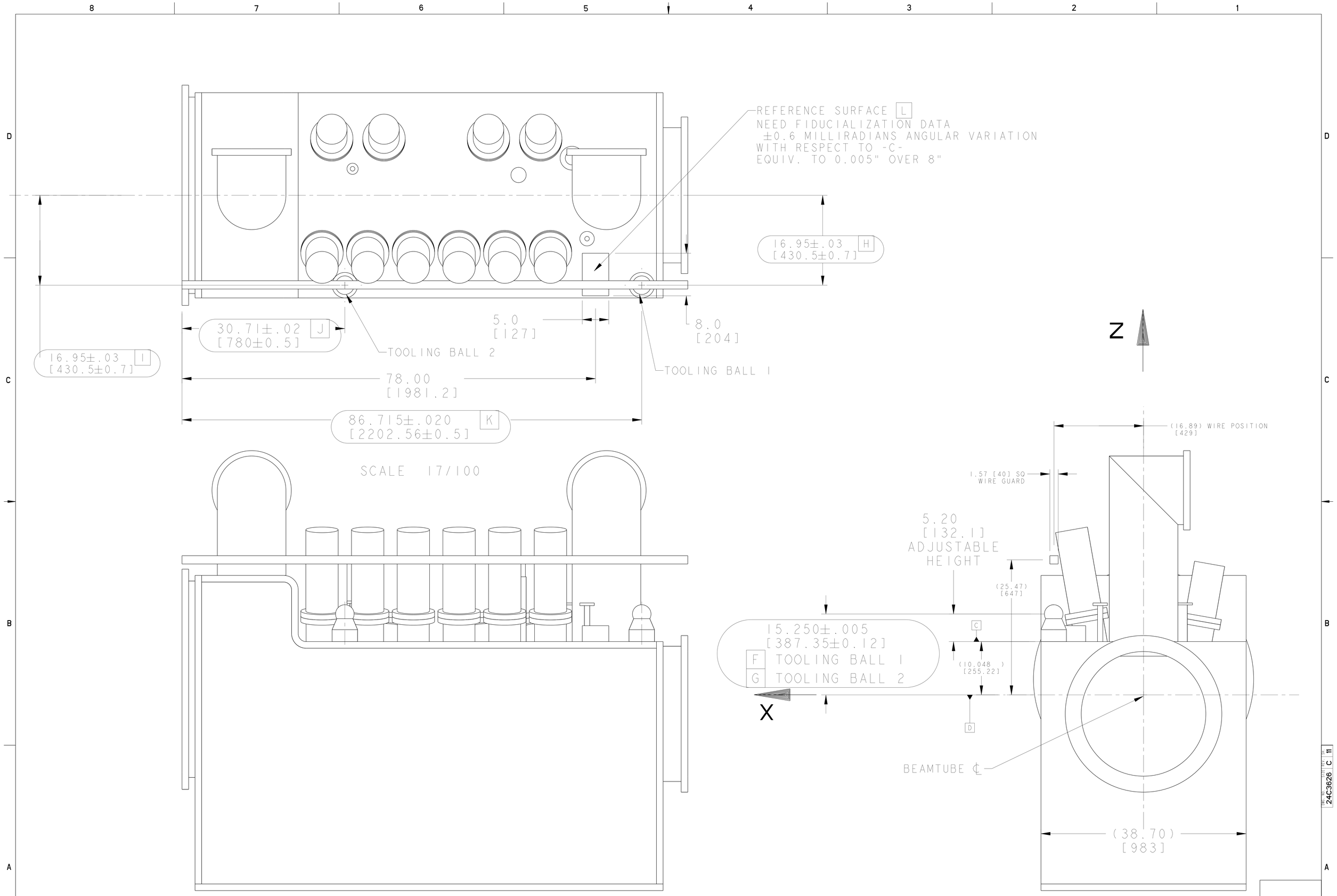

FIDUCIAL LAYOUT INFORMATION

THIRD ANGLE PROJECTION

ERNEST ORLANDO LAWRENCE
BERKELEY NATIONAL LABORATORY
UNIVERSITY OF CALIFORNIA - BERKELEY

LHC IR FEEDBOX
MAJOR ASSEMBLY
DFBXD, DFBXH, (IP2&8, RIGHT) FEED BOX ASSY

MICROFILMED:	DWG. TYPE	SHOWN ON	SCALE: 13/100	DO NOT SCALE PRINTS
	ASSEM	-	SHEET 11 OF 11	
PATENT CLEAR:	DESIGN ACCT. NO.	CATEGORY CODE	DWG. NO.	SIZE / REV.
	Z5LCE2	LH2001	24C3626	C

DWG. NO. 24C3626 SIZE C REV. 11