NOTE:
1. DERIVED FROM SPECIFICATION LHC-DFBX-ES-100
2. DERIVED FROM SPECIFICATION LHC-DFBX-ES-200
3. DERIVED FROM SPECIFICATION LHC-DFBX-ES-210
4. DERIVED FROM SPECIFICATION LHC-DFBX-ES-240
5. DERIVED FROM SPECIFICATION LHC-DFBX-ES-260
6. DERIVED FROM SPECIFICATION LHC-DFBX-ES-250
7. DERIVED FROM SPECIFICATION LHC-DFBX-ES-230
8. FILL MOUNTING HOLES WITH EPOXY
9. HTS CURRENT LEAD IN SPECIFICATION M923B
10. PLATE FLATNESS TOLERANCE IS BASED ON FOLLOWING CONSTRAINTS
    40 MM FLUID LEVEL RANGE ON THE HTS LEADAT 10 ° OR 39.3 MM
    - 20 MM FLUID LEVEL CONTROL RANGE
    - 15 MM VARIATION IN HTS POSITION DUE TO FLOOR GRADE
    - 0.8 MM VARIATION IN HTS SEAT POSITION
    - 0.2 MM VARIATION IN SEAL TOLERANCE
    - 0.2 VARIATION IN SEAL SURFACE POSITION
    LEAVES 0.125" [3.1 MM] IN PLATE VARIATION

PRELIMINARY

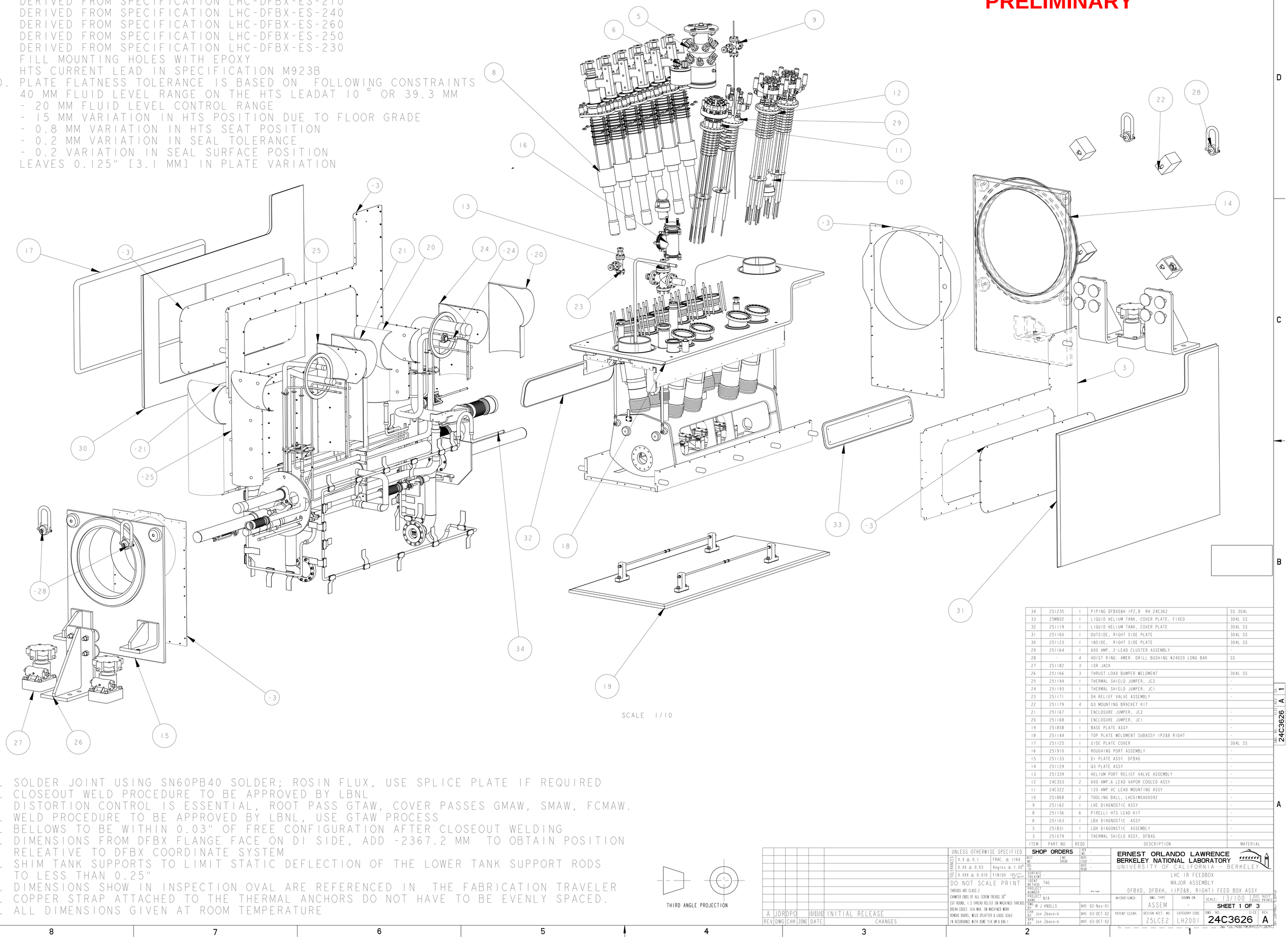

SCALE 1/10

ITEM	PART NO	REQD	DESCRIPTION	MATERIAL
34	251235	1	PIPING DFBXD&H IP2,8 RH 24C362	SS 304L
33	25M802	1	LIQUID HELIUM TANK, COVER PLATE, FIXED	304L SS
32	251119	1	LIQUID HELIUM TANK, COVER PLATE	304L SS
31	251160	1	OUTSIDE, RIGHT SIDE PLATE	304L SS
30	251123	1	INSIDE, RIGHT SIDE PLATE	304L SS
29	251164	1	600 AMP, 2-LEAD CLUSTER ASSEMBLY	-
28	-	4	HOIST RING: AMER. DRILL BUSHING #24020 LONG BAR	SS
27	251182	3	ISR JACK	
26	251166	3	THRUST LOAD BUMPER WELDMENT	304L SS
25	251194	1	THERMAL SHIELD JUMPER, JC2	-
24	251193	1	THERMAL SHIELD JUMPER, JC1	-
23	251171	1	DH RELIEF VALVE ASSEMBLY	-
22	251179	4	Q3 MOUNTING BRACKET KIT	
21	251167	1	ENCLOSURE JUMPER, JC2	-
20	251168	1	ENCLOSURE JUMPER, JC1	-
19	251858	1	BASE PLATE ASSY	-
18	251144	1	TOP PLATE WELDMENT SUBASSY IP2&8 RIGHT	-
17	251125	1	SIDE PLATE COVER	304L SS
16	251910	1	ROUGHING PORT ASSEMBLY	-
15	251133	1	DI PLATE ASSY DFBXG	-
14	251129	1	Q3 PLATE ASSY	-
13	251339	1	HELIUM PORT RELIEF VALVE ASSEMBLY	-
12	24C353	2	600 AMP,6 LEAD VAPOR COOLED ASSY	-
11	24C322	1	120 AMP VC LEAD MOUNTING ASSY	-
10	251868	2	TOOLING BALL, LHCGIMSA00092	-
9	251162	1	LHE DIAGNOSTIC ASSY	-
8	251156	6	PIRELLI HTS LEAD KIT	-
6	251163	1	LBX DIAGNOSTIC ASSY	-
5	251831	1	LQX DIAGONSTIC ASSEMBLY	-
3	251079	1	THERMAL SHIELD ASSY, DFBXG	-

11. SOLDER JOINT USING SN60PB40 SOLDER; ROSIN FLUX, USE SPLICE PLATE IF REQUIRED
12. CLOSEOUT WELD PROCEDURE TO BE APPROVED BY LBNL
    DISTORTION CONTROL IS ESSENTIAL, ROOT PASS GTAW, COVER PASSES GMAW, SMAW, FCMAW.
13. WELD PROCEDURE TO BE APPROVED BY LBNL, USE GTAW PROCESS
14. BELLOWS TO BE WITHIN 0.03" OF FREE CONFIGURATION AFTER CLOSEOUT WELDING
15. DIMENSIONS FROM DFBX FLANGE FACE ON DI SIDE, ADD -2367.2 MM TO OBTAIN POSITION RELEATIVE TO DFBX COORDINATE SYSTEM
16. SHIM TANK SUPPORTS TO LIMIT STATIC DEFLECTION OF THE LOWER TANK SUPPORT RODS TO LESS THAN 0.25"
17. DIMENSIONS SHOW IN INSPECTION OVAL ARE REFERENCED IN THE FABRICATION TRAVELER
18. COPPER STRAP ATTACHED TO THE THERMAL ANCHORS DO NOT HAVE TO BE EVENLY SPACED.
19. ALL DIMENSIONS GIVEN AT ROOM TEMPERATURE

THIRD ANGLE PROJECTION

REV	DWG	CHK	ZONE	DATE	CHANGES
A	JDR	DPQ		10/03/02	INITIAL RELEASE

UNLESS OTHERWISE SPECIFIED
TOLERANCES: X.X ± 0.1 FRAC. ± 1/64; X.XX ± 0.03 Angles ± 1.00°; X.XXX ± 0.010 FINISH 125 µin
DO NOT SCALE PRINT
THREADS ARE CLASS 2
CHAMFER ENDS OF ALL SCREW THREADS 30°
CUT ROUND, 1.5 THREAD RELIEF ON MACHINED THREADS
BREAK EDGES .016 MAX. ON MACHINED WORK
REMOVE BURRS, WELD SPATTER & LOOSE SCALE
IN ACCORDANCE WITH ASME Y14.5M & BAL1

SHOP ORDERS

ACC NO.		REQD	DATE
DEL TO			DATE
SURFACE TREATMENT	-		
IDENT METHOD	TAG		
PROJECT NUMBER	-		
PROJECT NAME	N/A		
DWG BY	M J KNOLLS		DATE 02-Nov-01
CHK BY	Jon Zbasnik		DATE 03-OCT-02
APP BY	Jon Zbasnik		DATE 03-OCT-02

ERNEST ORLANDO LAWRENCE BERKELEY NATIONAL LABORATORY
UNIVERSITY OF CALIFORNIA - BERKELEY

LHC IR FEEDBOX
MAJOR ASSEMBLY
DFBXD, DFBXH, (IP2&8, RIGHT) FEED BOX ASSY

MICROFILMED:	DWG. TYPE	SHOWN ON	SCALE: 1/3/100	DO NOT SCALE PRINT
	ASSEM	-	SHEET 1 OF 3	
PATENT CLEAR:	DESIGN ACCT. NO.	CATEGORY CODE	DWG. NO.	SIZE / REV.
	Z5LCE2	LH2001	24C3626	A

DWG NO. 24C3626 | SIZE A | REV 1

PRELIMINARY

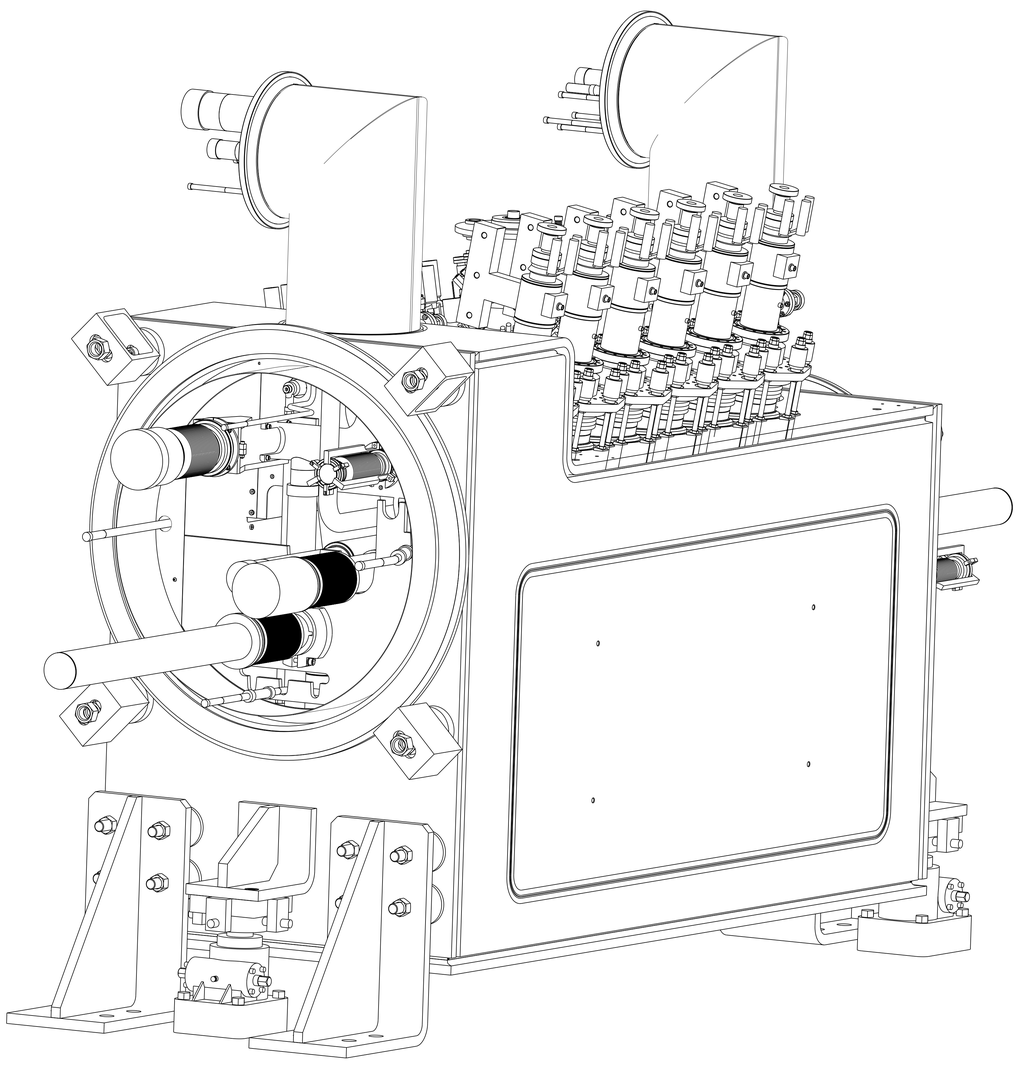

D1 END

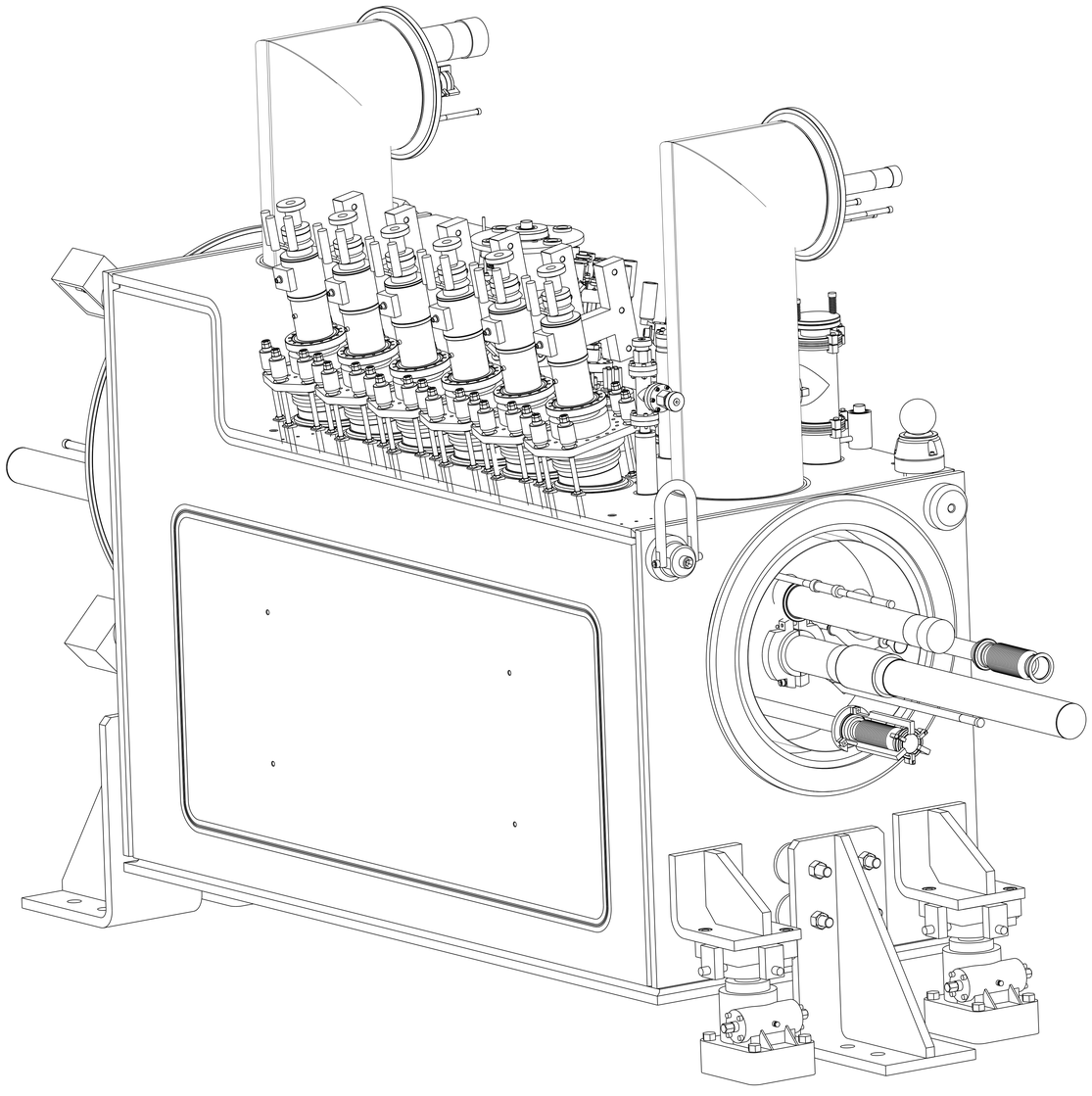

Q3 END

DFBXG, IP8 (LEFT)

THIRD ANGLE PROJECTION

ERNEST ORLANDO LAWRENCE
BERKELEY NATIONAL LABORATORY
UNIVERSITY OF CALIFORNIA - BERKELEY

LHC IR FEEDBOX
MAJOR ASSEMBLY
DFBXD, DFBXH, (IP2&8, RIGHT) FEED BOX ASSY

MICROFILMED:	DWG. TYPE	SHOWN ON	SCALE: 9/50	DO NOT SCALE PRINTS
	ASSEM	-	SHEET 2 OF 3	
PATENT CLEAR:	DESIGN ACCT. NO.	CATEGORY CODE	DWG. NO.	SIZE / REV.
	Z5LCE2	LH2001	24C3626	A

DWG. NO. 24C3626 SIZE A REV. 2

PRELIMINARY

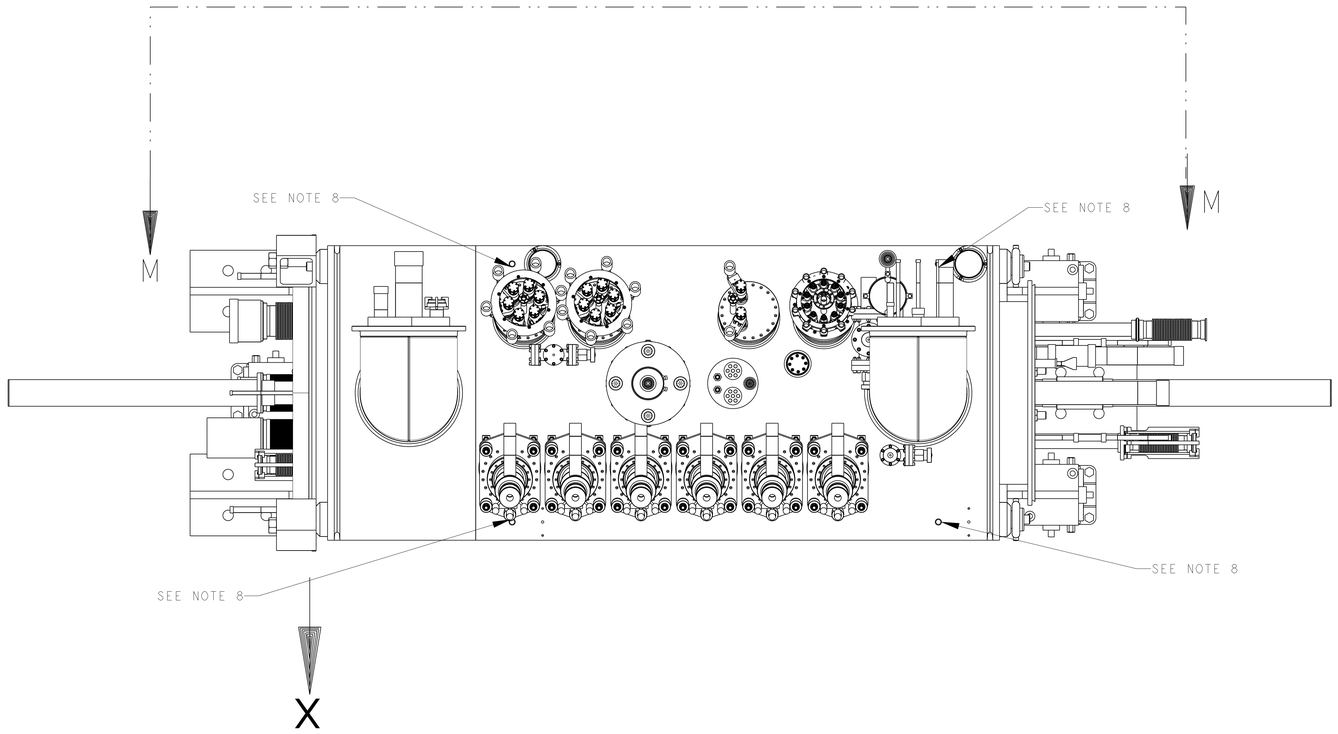

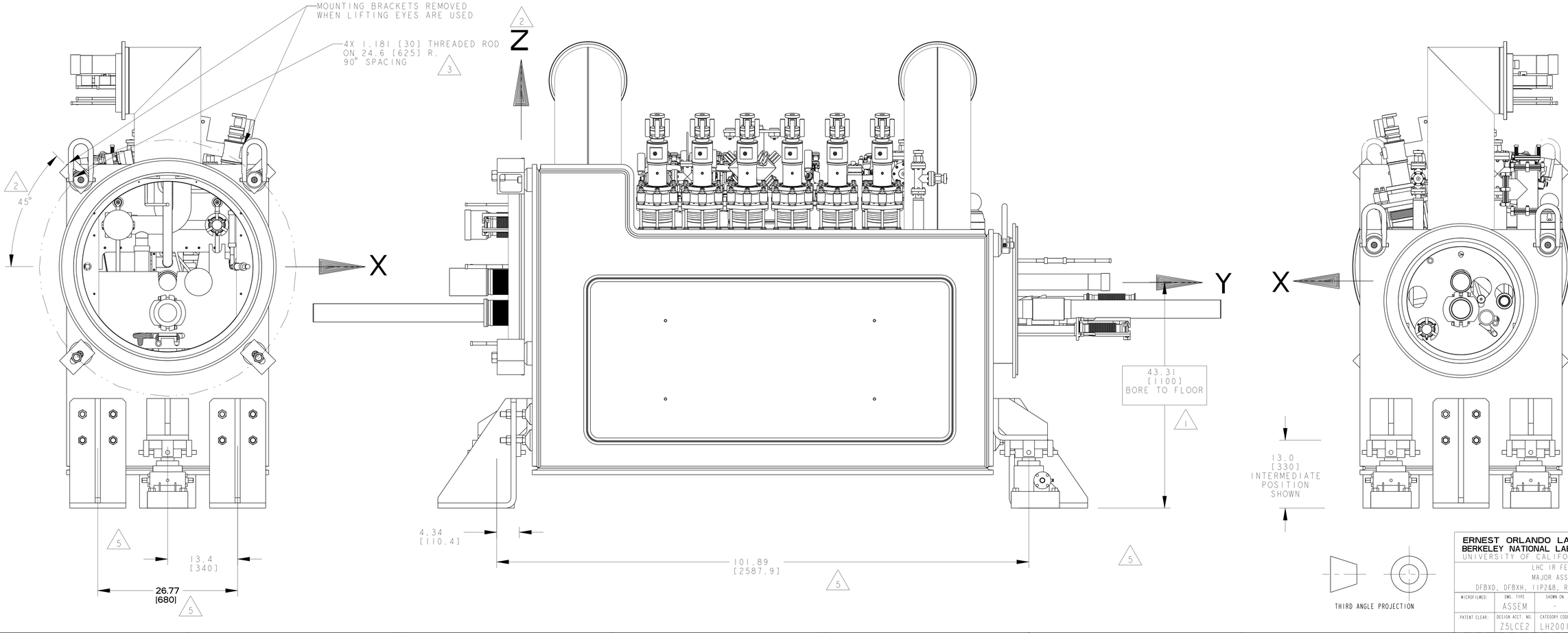

ERNEST ORLANDO LAWRENCE BERKELEY NATIONAL LABORATORY
UNIVERSITY OF CALIFORNIA - BERKELEY

LHC IR FEEDBOX
MAJOR ASSEMBLY
DFBXD, DFBXH, (IP2&8, RIGHT) FEED BOX ASSY

MICROFILMED:	DWG. TYPE	SHOWN ON	SCALE: 1:7/100	DO NOT SCALE PRINTS
	ASSEM	-	SHEET 3 OF 3	
PATENT CLEAR:	DESIGN ACCT. NO.	CATEGORY CODE	DWG. NO.	SIZE / REV.
	Z5LCE2	LH2001	24C3626	A

DWG. NO. 24C3626 SIZE A SHEET 3 OF 3