NOTE:
1. DERIVED FROM SPECIFICATION LHC-DFBX-ES-100
2. DERIVED FROM SPECIFICATION LHC-DFBX-ES-200
3. DERIVED FROM SPECIFICATION LHC-DFBX-ES-210
4. DERIVED FROM SPECIFICATION LHC-DFBX-ES-240
5. DERIVED FROM SPECIFICATION LHC-DFBX-ES-260
6. DERIVED FROM SPECIFICATION LHC-DFBX-ES-250
7. DERIVED FROM SPECIFICATION LHC-DFBX-ES-230
8. FILL MOUNTING HOLES WITH EPOXY
9. HTS CURRENT LEAD IN SPECIFICATION M923B
10. PLATE FLATNESS TOLERANCE IS BASED ON FOLLOWING CONSTRAINTS
    40 MM FLUID LEVEL RANGE ON THE HTS LEADAT 10 ° OR 39.3 MM
    - 20 MM FLUID LEVEL CONTROL RANGE
    - 15 MM VARIATION IN HTS POSITION DUE TO FLOOR GRADE
    - 0.8 MM VARIATION IN HTS SEAT POSITION
    - 0.2 MM VARIATION IN SEAL TOLERANCE
    - 0.2 VARIATION IN SEAL SURFACE POSITION
    LEAVES 0.125" [3.1 MM] IN PLATE VARIATION

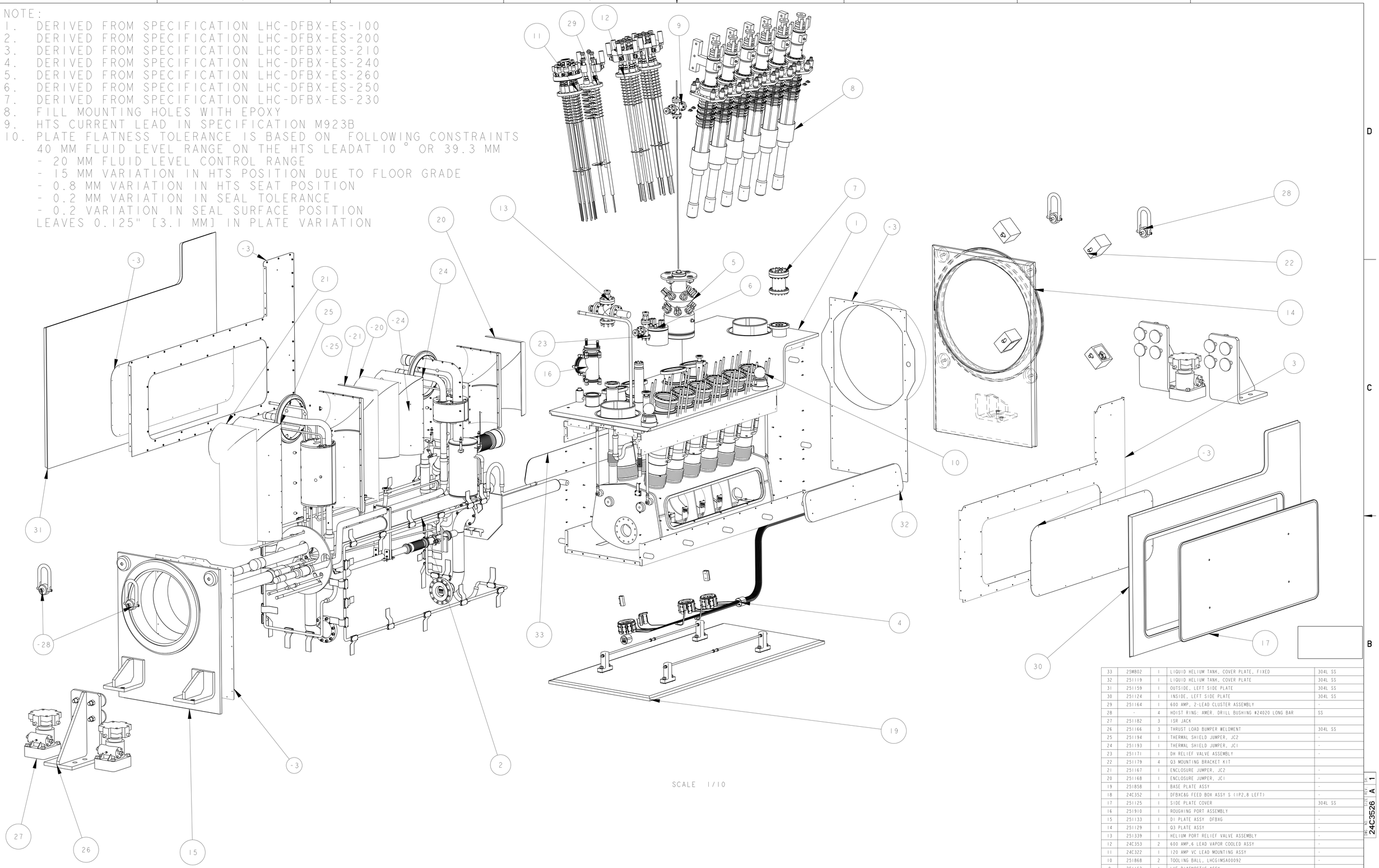

SCALE 1/10

ITEM	PART NO	REQD	DESCRIPTION	MATERIAL
33	25M802	1	LIQUID HELIUM TANK, COVER PLATE, FIXED	304L SS
32	251119	1	LIQUID HELIUM TANK, COVER PLATE	304L SS
31	251159	1	OUTSIDE, LEFT SIDE PLATE	304L SS
30	251124	1	INSIDE, LEFT SIDE PLATE	304L SS
29	251164	1	600 AMP, 2-LEAD CLUSTER ASSEMBLY	-
28	-	4	HOIST RING: AMER. DRILL BUSHING #24020 LONG BAR	SS
27	251182	3	ISR JACK	
26	251166	3	THRUST LOAD BUMPER WELDMENT	304L SS
25	251194	1	THERMAL SHIELD JUMPER, JC2	-
24	251193	1	THERMAL SHIELD JUMPER, JC1	-
23	251171	1	DH RELIEF VALVE ASSEMBLY	-
22	251179	4	Q3 MOUNTING BRACKET KIT	
21	251167	1	ENCLOSURE JUMPER, JC2	-
20	251168	1	ENCLOSURE JUMPER, JC1	-
19	251858	1	BASE PLATE ASSY	-
18	24C352	1	DFBXC&G FEED BOX ASSY S (IP2,8 LEFT)	-
17	251125	1	SIDE PLATE COVER	304L SS
16	251910	1	ROUGHING PORT ASSEMBLY	-
15	251133	1	D1 PLATE ASSY DFBXG	-
14	251129	1	Q3 PLATE ASSY	-
13	251339	1	HELIUM PORT RELIEF VALVE ASSEMBLY	-
12	24C353	2	600 AMP,6 LEAD VAPOR COOLED ASSY	-
11	24C322	1	120 AMP VC LEAD MOUNTING ASSY	-
10	251868	2	TOOLING BALL, LHCG1MSA00092	-
9	251162	1	LHE DIAGNOSTIC ASSY	-
8	251156	6	PIRELLI HTS LEAD KIT	-
7	251851	1	HELIUM GUARD ASSEMBLY	-
6	251163	1	LBX DIAGNOSTIC ASSY	-
5	251831	1	LQX DIAGONSTIC ASSEMBLY	-
4	251864	1	BUS DUCT ASSEMBLY	-
3	251079	1	THERMAL SHIELD ASSY, DFBXG	-
2	251226	1	PIPING ASSEMBLY DFBXG, DFBXC	-
1	251137	1	DFBX C AND G	-

11. SOLDER JOINT USING SN60PB40 SOLDER; ROSIN FLUX, USE SPLICE PLATE IF REQUIRED
12. CLOSEOUT WELD PROCEDURE TO BE APPROVED BY LBNL
    DISTORTION CONTROL IS ESSENTIAL, ROOT PASS GTAW, COVER PASSES GMAW, SMAW, FCMAW.
13. WELD PROCEDURE TO BE APPROVED BY LBNL, USE GTAW PROCESS
14. BELLOWS TO BE WITHIN 0.03" OF FREE CONFIGURATION AFTER CLOSEOUT WELDING
15. DIMENSIONS FROM DFBX FLANGE FACE ON D1 SIDE, ADD -2367.2 MM TO OBTAIN POSITION RELEATIVE TO DFBX COORDINATE SYSTEM
16. SHIM TANK SUPPORTS TO LIMIT STATIC DEFLECTION OF THE LOWER TANK SUPPORT RODS TO LESS THAN 0.25"
17. DIMENSIONS SHOW IN INSPECTION OVAL ARE REFERENCED IN THE FABRICATION TRAVELER
18. COPPER STRAP ATTACHED TO THE THERMAL ANCHORS DO NOT HAVE TO BE EVENLY SPACED.
19. ALL DIMENSIONS GIVEN AT ROOM TEMPERATURE

REV	DWG	CHK	ZONE	DATE	CHANGES
A	JDR	DPO		10/03/02	INITIAL RELEASE

THIRD ANGLE PROJECTION

UNLESS OTHERWISE SPECIFIED
TOLERANCES
X.X ± 0.1 FRAC. ± 1/64
X.XX ± 0.03 Angles ± 1.00°
X.XXX ± 0.010 FINISH 125 √RMS
DO NOT SCALE PRINT
THREADS ARE CLASS 2
CHAMFER ENDS OF ALL SCREW THREADS 30°
CUT ROUND, 1.5 THREAD RELIEF ON MACHINED THREADS
BREAK EDGES .016 MAX. ON MACHINED WORK
REMOVE BURRS, WELD SPLATTER & LOOSE SCALE
IN ACCORDANCE WITH ASME Y14.5M & BAL1

SHOP ORDERS

ACCT. NO.	NO. REQD	DRN BY	
DEL TO		DATE	
		ISSD	
		DATE	
		REQD	
SURFACE TREATMT.			
IDENT METHOD	TAG		
PROJECT NUMBER			
PROJECT NAME	N/A		
DWG BY	M J KNOLLS	DATE	02-Nov-01
CHK BY	Jon Zbasnik	DATE	03-OCT-02
APR BY	Jon Zbasnik	DATE	03-OCT-02

ERNEST ORLANDO LAWRENCE BERKELEY NATIONAL LABORATORY
UNIVERSITY OF CALIFORNIA - BERKELEY

LHC IR FEEDBOX
MAJOR ASSEMBLY
DFBXG (IP8, LEFT) FEED BOX ASSY

MICROFILMED:	DWG. TYPE	SHOWN ON	SCALE: 13/100	DO NOT SCALE PRINTS
	ASSEM	-	SHEET 1 OF 11	
PATENT CLEAR:	DESIGN ACCT. NO.	CATEGORY CODE	DWG. NO.	SIZE / REV.
	Z5LCE2	LH2001	24C3526	A

DWG. NO. 24C3526 SIZE A REV. 1

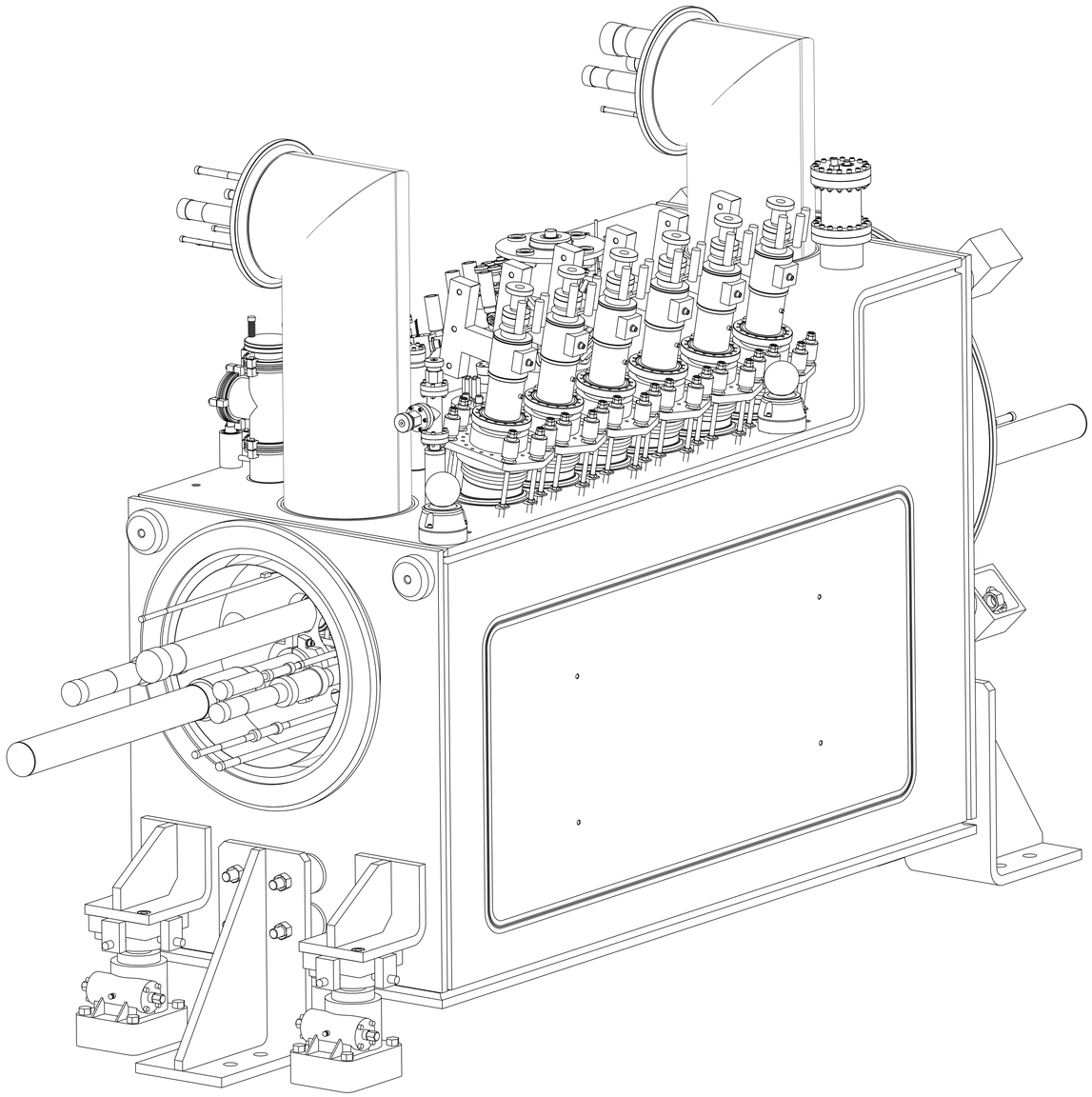

D1 END

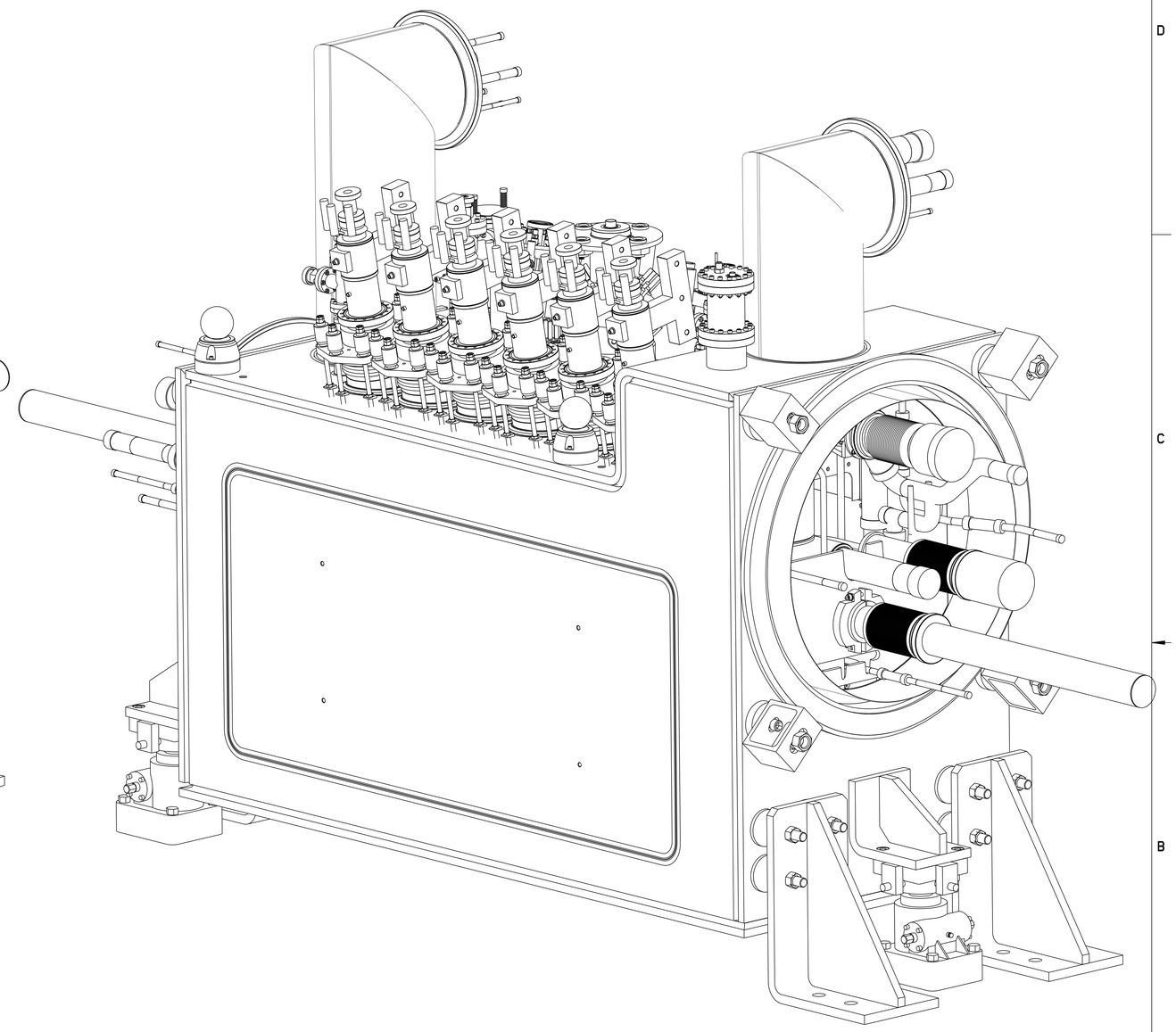

Q3 END

DFBXG, IP8 (LEFT)

THIRD ANGLE PROJECTION

ERNEST ORLANDO LAWRENCE
BERKELEY NATIONAL LABORATORY
UNIVERSITY OF CALIFORNIA - BERKELEY

LHC IR FEEDBOX
MAJOR ASSEMBLY
DFBXG (IP8, LEFT) FEED BOX ASSY

MICROFILMED:	DWG. TYPE	SHOWN ON	SCALE: 9/50	DO NOT SCALE PRINTS
	ASSEM	-	SHEET 2 OF 11	
PATENT CLEAR:	DESIGN ACCT. NO.	CATEGORY CODE	DWG. NO.	SIZE / REV.
	Z5LCE2	LH2001	24C3526	A

DWG. NO. 24C3526 SIZE A REV 2

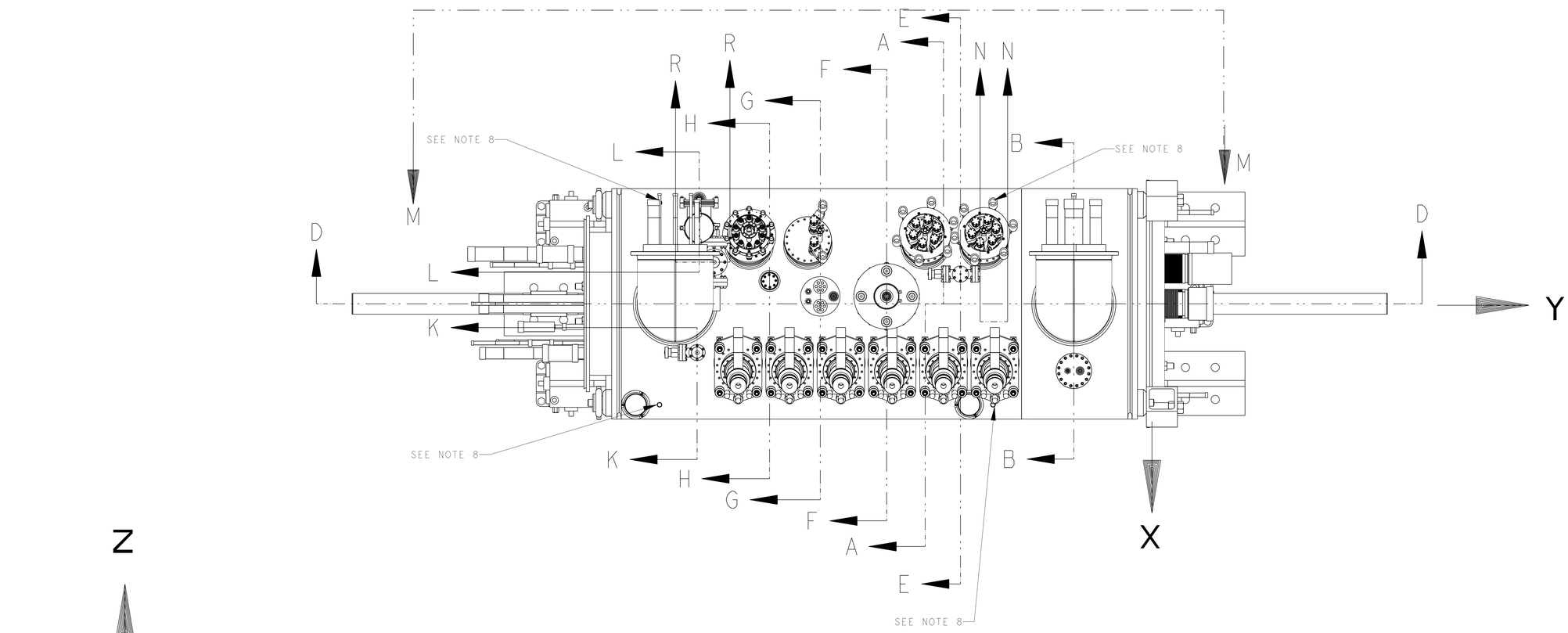

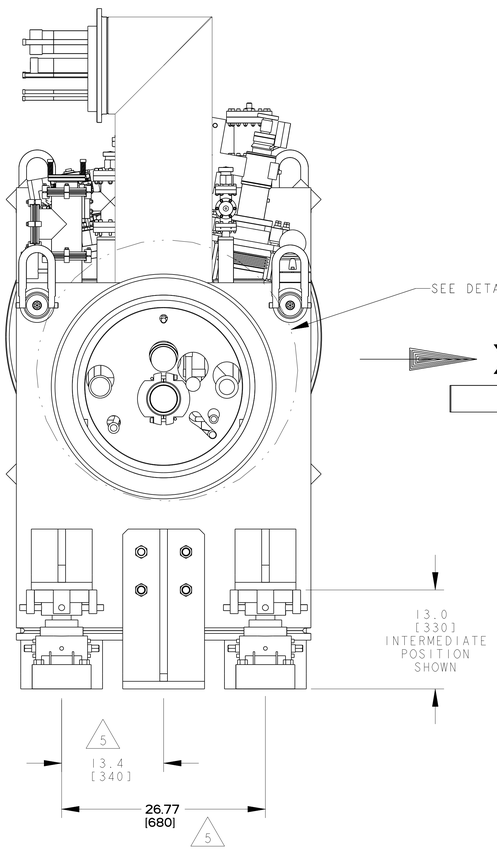

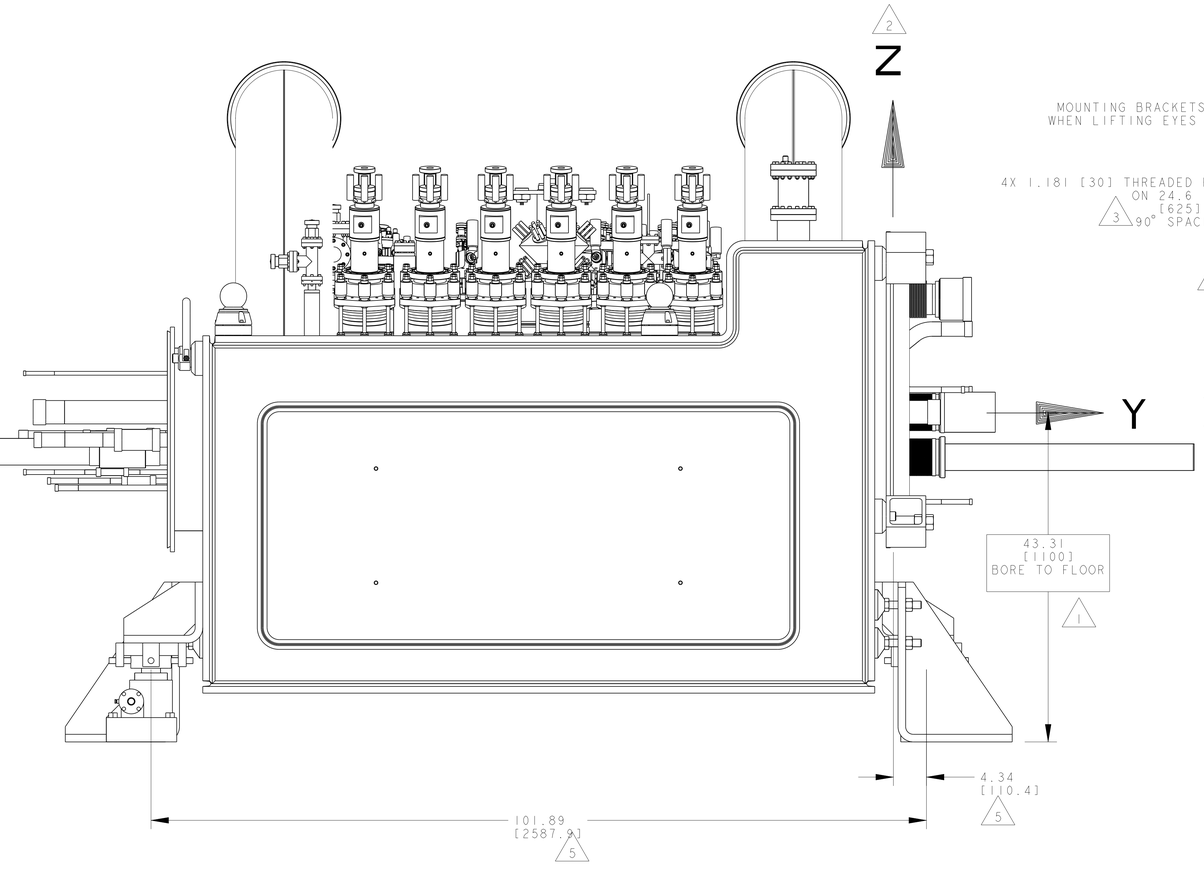

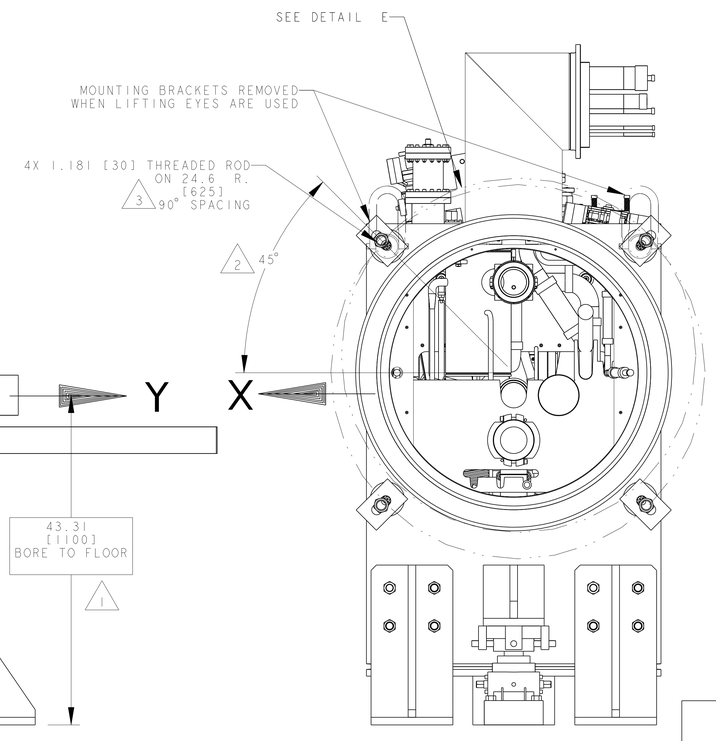

THIRD ANGLE PROJECTION

ERNEST ORLANDO LAWRENCE
BERKELEY NATIONAL LABORATORY
UNIVERSITY OF CALIFORNIA - BERKELEY

LHC IR FEEDBOX
MAJOR ASSEMBLY
DFBXG (IP8, LEFT) FEED BOX ASSY

MICROFILMED:	DWG. TYPE	SHOWN ON	SCALE: 1:3/100	DO NOT SCALE PRINTS
	ASSEM	-	SHEET 3 OF 11	
PATENT CLEAR:	DESIGN ACCT. NO.	CATEGORY CODE	DWG. NO.	SIZE / REV.
	Z5LCE2	LH2001	24C3526	A

DWG. NO. 24C3526 SHEET NO. 3 A

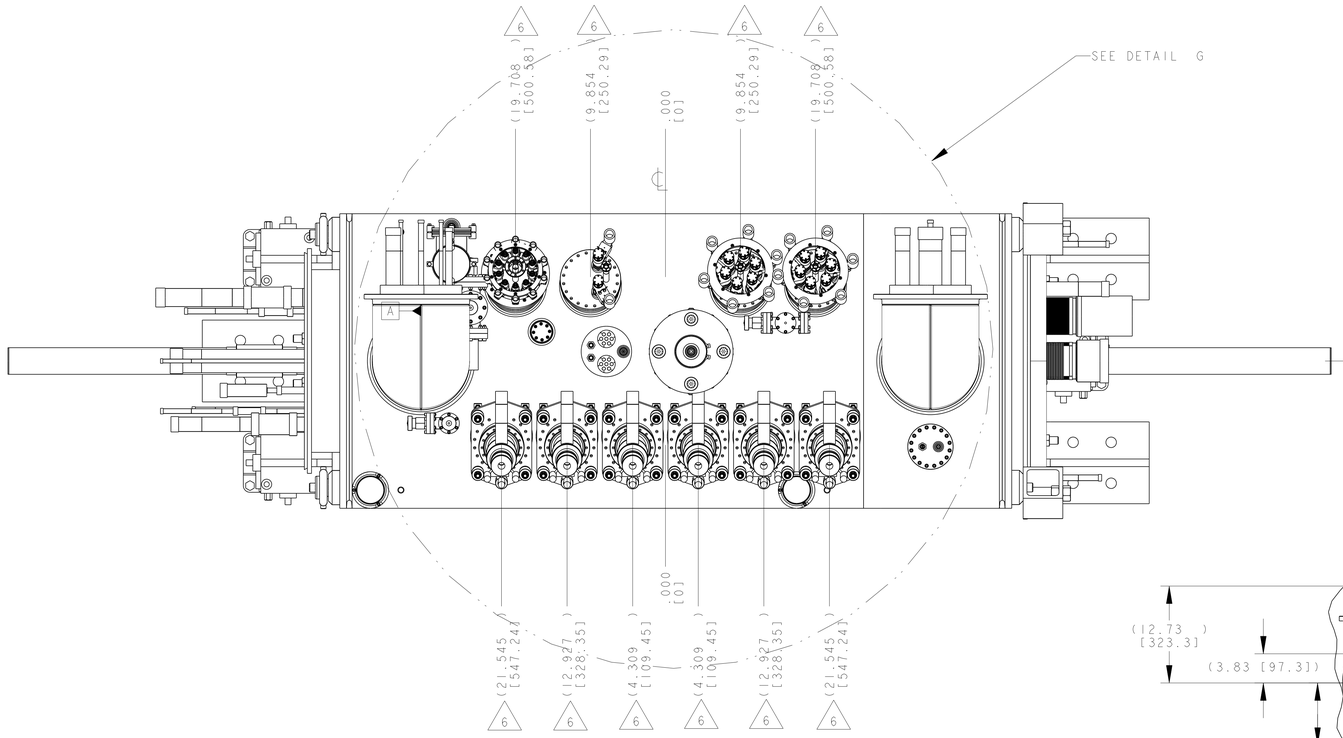

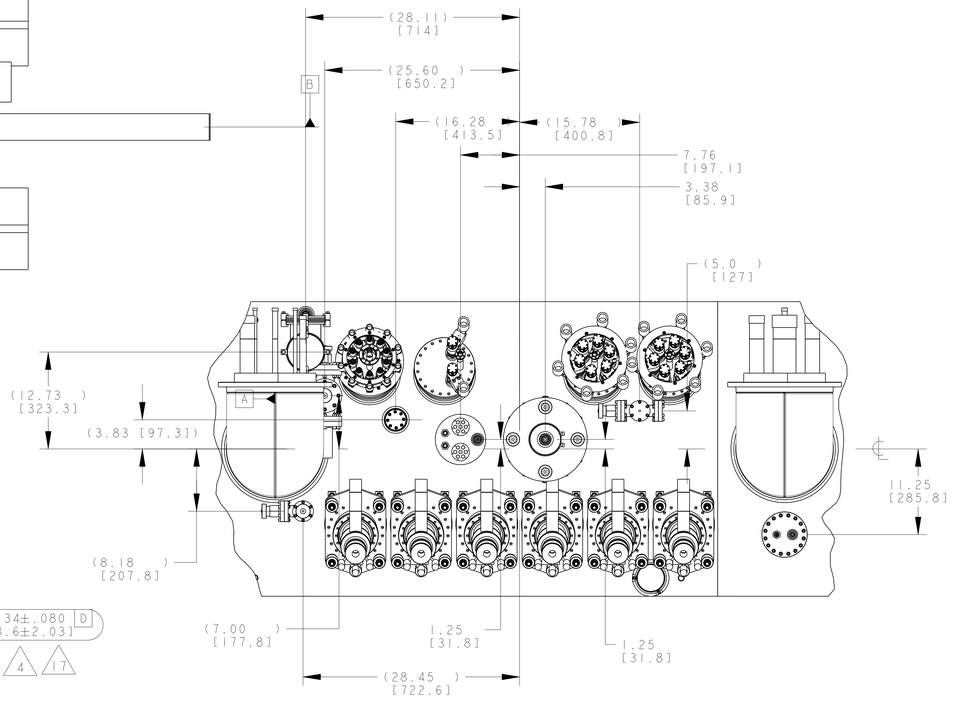

DETAIL G
SCALE 13/100

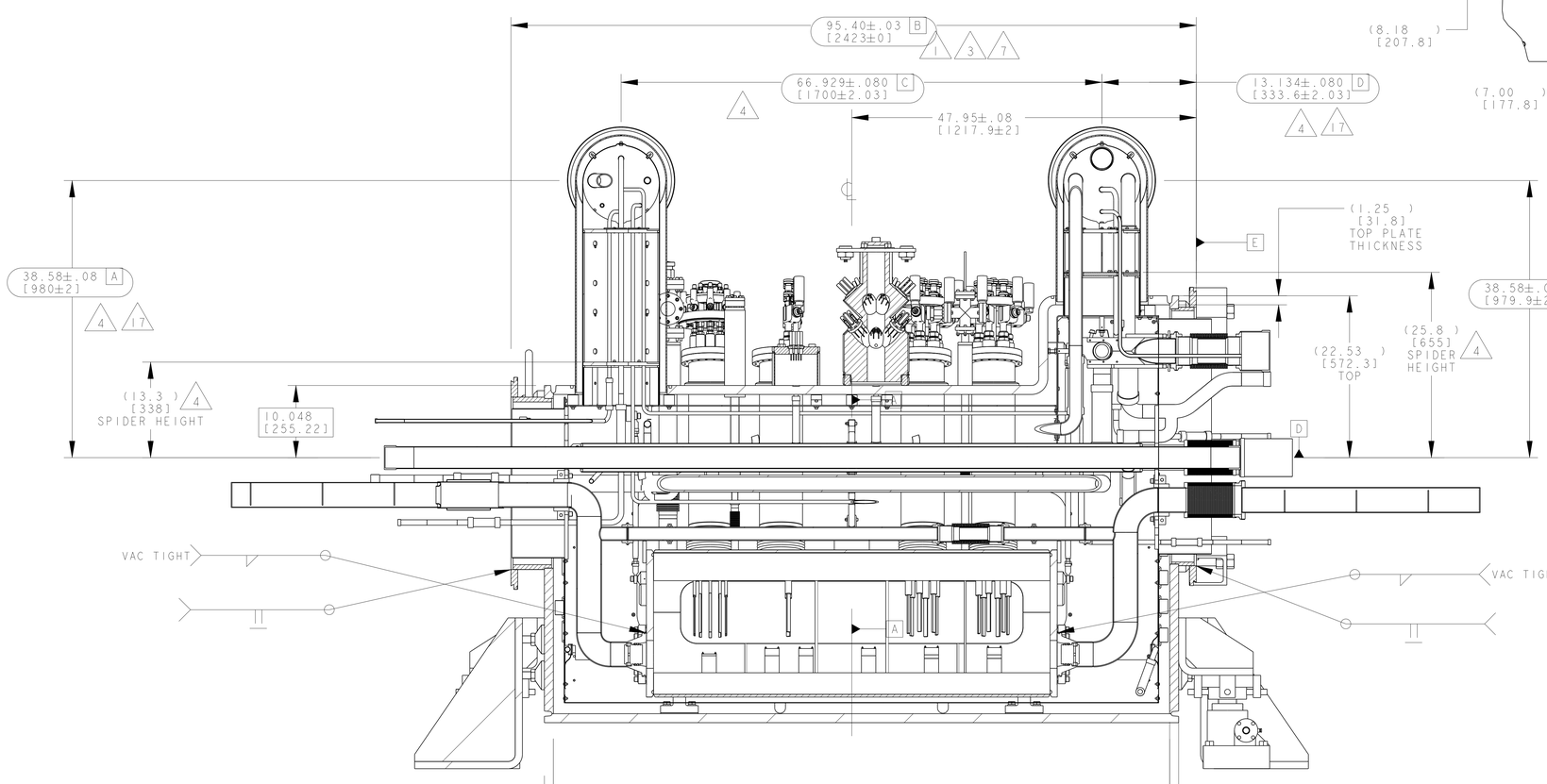

SECTION D-D
SCALE 13/100

THIRD ANGLE PROJECTION

ERNEST ORLANDO LAWRENCE BERKELEY NATIONAL LABORATORY
UNIVERSITY OF CALIFORNIA · BERKELEY

LHC IR FEEDBOX
MAJOR ASSEMBLY
DFBXG (IP8, LEFT) FEED BOX ASSY

MICROFILMED:	DWG. TYPE	SHOWN ON	SCALE: 13/100	DO NOT SCALE PRINTS
	ASSEM	-	SHEET 4 OF 11	
PATENT CLEAR:	DESIGN ACCT. NO.	CATEGORY CODE	DWG. NO.	SIZE / REV.
	Z5LCE2	LH2001	24C3526	A

DWG. NO. 24C3526 SIZE A REV 4

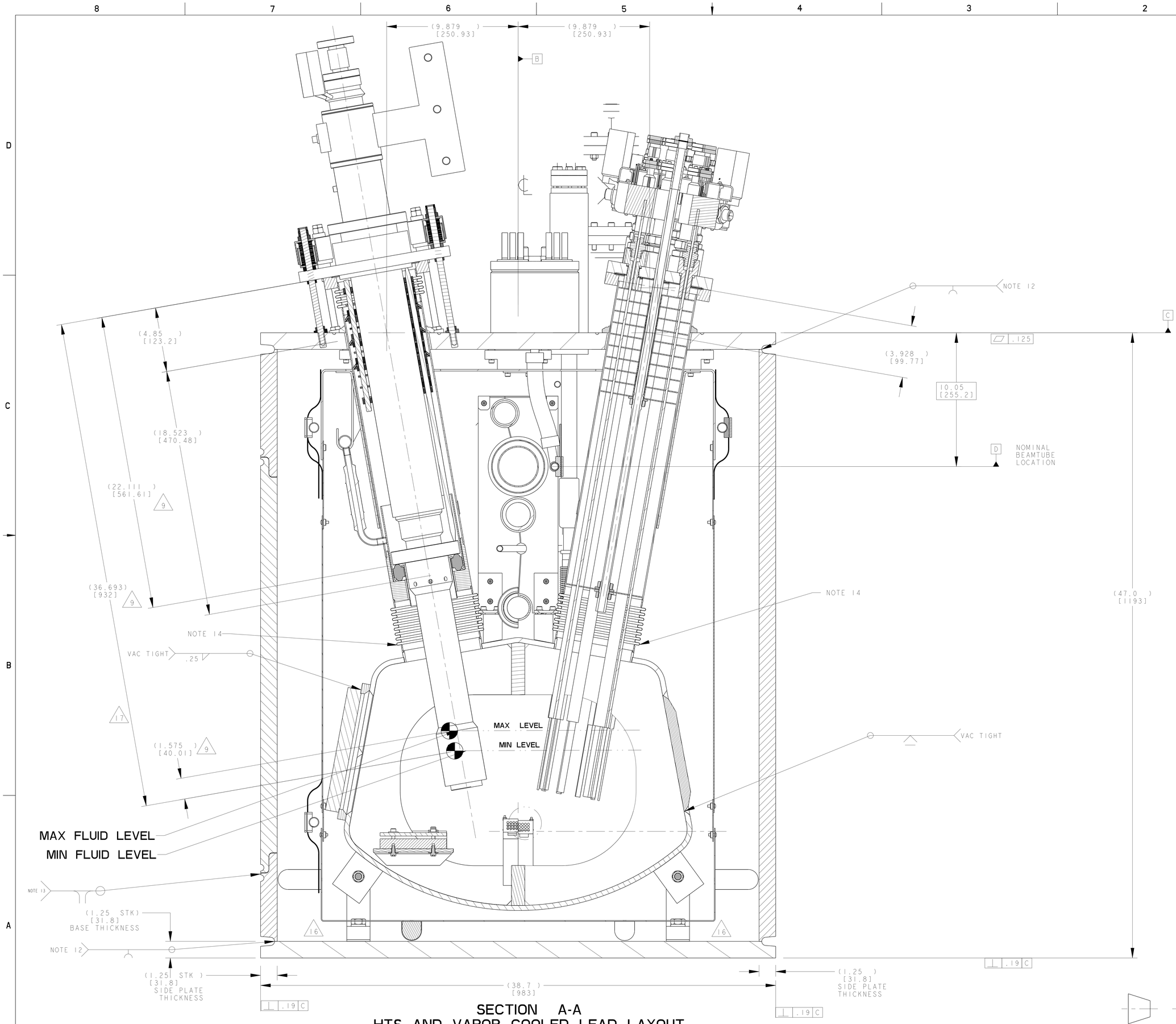

SECTION A-A
HTS AND VAPOR COOLED LEAD LAYOUT
SCALE 2/5

ERNEST ORLANDO LAWRENCE BERKELEY NATIONAL LABORATORY
UNIVERSITY OF CALIFORNIA - BERKELEY

LHC IR FEEDBOX
MAJOR ASSEMBLY
DFBXC FEED BOX ASSY SKEL

MICROFILMED:	DWG. TYPE PART	SHOWN ON	SCALE: 3/50	DO NOT SCALE PRINTS
			SHEET 5 OF 11	
PATENT CLEAR:	DESIGN ACCT. NO. Z5LCE2	CATEGORY CODE LH2001	DWG. NO. 24C3526	SIZE A REV.

DWG. NO. 24C3526 SIZE A REV. 5

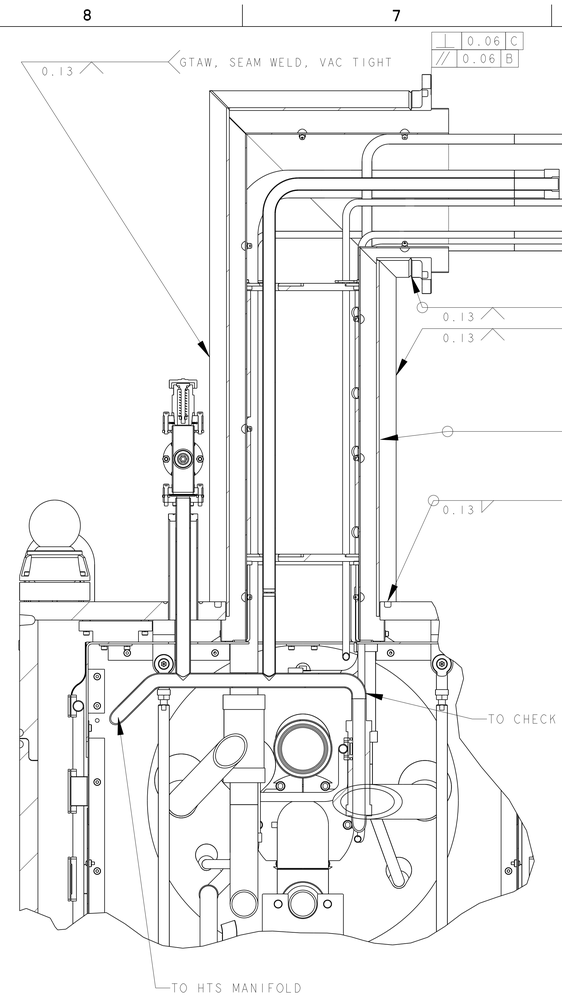

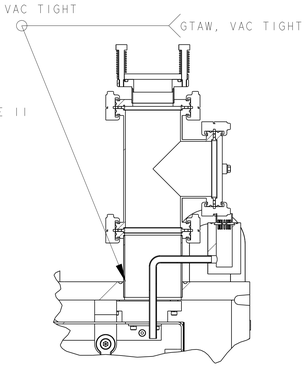

SECTION L - L
SCALE 1/4

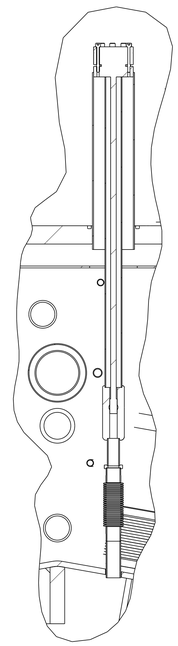

SECTION H - H
SCALE 1/4

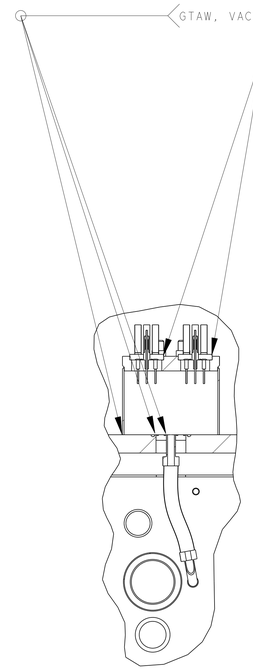

SECTION G - G
SCALE 1/4

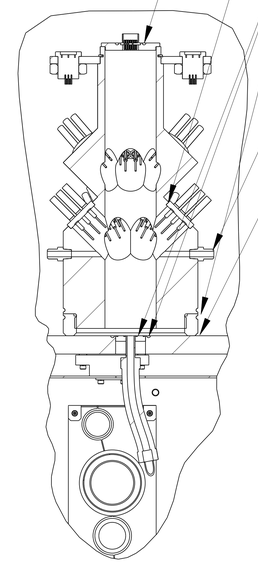

SECTION F - F
SCALE 1/4

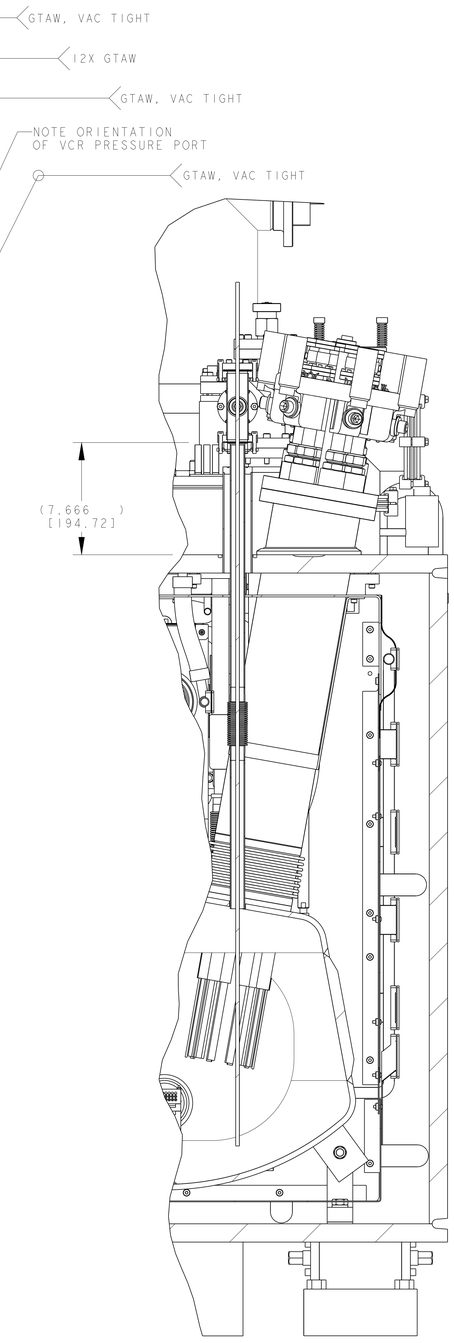

SECTION E - E
SCALE 1/4

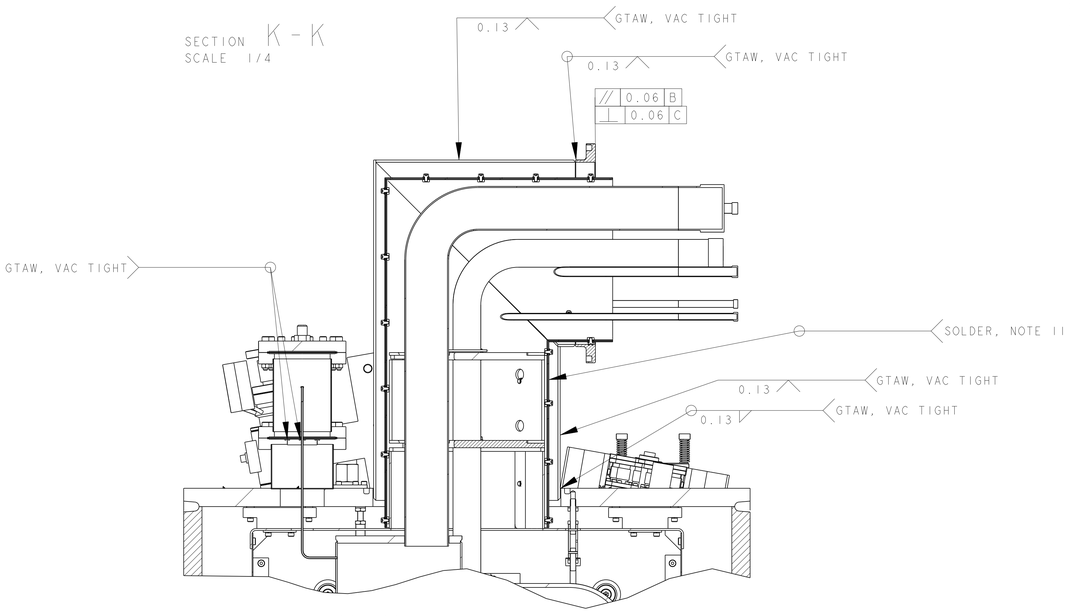

SECTION K - K
SCALE 1/4

SECTION B - B
SCALE 1/4

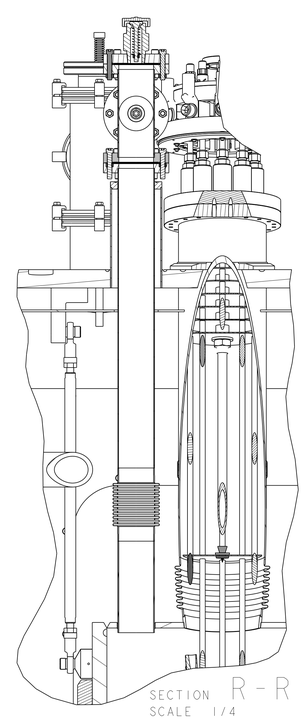

SECTION R - R
SCALE 1/4

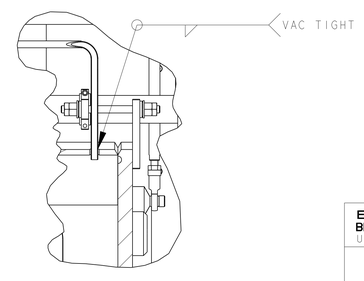

SECTION N - N
SCALE 1/4

ERNEST ORLANDO LAWRENCE
BERKELEY NATIONAL LABORATORY
UNIVERSITY OF CALIFORNIA - BERKELEY

LHC IR FEEDBOX
MAJOR ASSEMBLY
DFBXG (IP8, LEFT) FEED BOX ASSY

MICROFILMED:	DWG. TYPE	SHOWN ON	SCALE: 13/100	DO NOT SCALE PRINTS
	ASSEM	-	SHEET 6 OF 11	
PATENT CLEAR:	DESIGN ACCT. NO.	CATEGORY CODE	DWG. NO.	SIZE / REV.
	Z5LCE2	LH2001	24C3526	A

DWG. NO. 24C3526 SIZE A SHT. 6

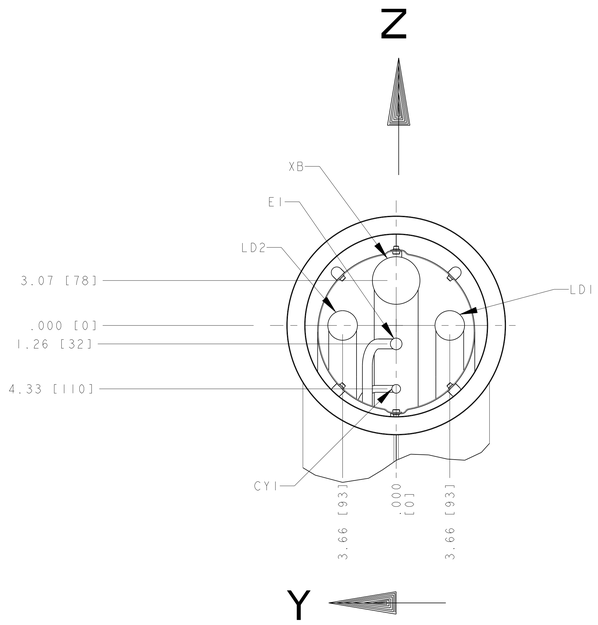

		DIM'S MEASURED FROM FLANGE CENTER	
PIPE	X	Y ±0.08	Z ±0.08
XB	-11.85±.08 [301±2]	0	3.07 [78]
LD2	-11.85±.08 [301±2]	3.66 [93]	0
LD1	-11.85±.08 [301±2]	-3.66 [93]	0
E1	-14.45±.08 [367±2]	0	-1.26 [32]
CY1	-14.45±.08 [367±2]	0	-4.33 [110]

4

DETAIL C
JC1 / QQSC
DIMENSIONAL TOLERANCE ± 0.08
ORIENTATION OPPOSITE OF SPECIFICATION 240
SCALE 1/4

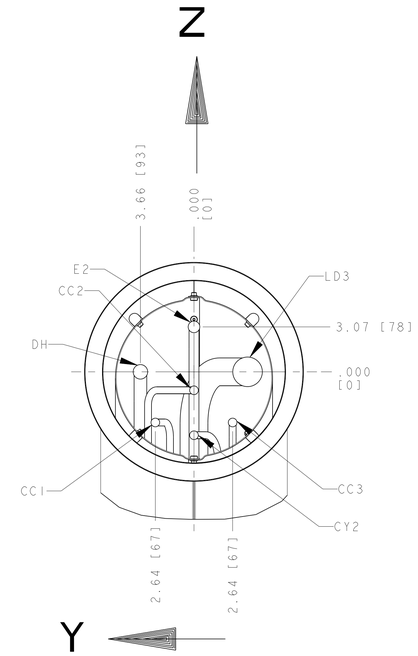

		DIM'S MEASURED FROM FLANGE CENTER	
PIPE	X	Y ±0.08	Z ±0.08
E2	-14.45±.08 [367±2]	0	3.07 [78]
DH	-14.45±.08 [367±2]	3.66 [93]	0
LD3	-11.85±.08 [301±2]	-3.66) [93]	0
CC2	-14.45±.08 [367±2]	0	-1.26 [32]
CC1	-14.45±.08 [367±2]	2.64 [67]	-3.46 [88]
CC3	-14.45±.08 [367±2]	-2.64 [67]	-3.46 [88]
CY2	-14.45±.08 [367±2]	0	-4.33 [110]

4

DETAIL D
JC2 / QQSD
DIMENSIONAL TOLERANCE ± 0.08
ORIENTATION OPPOSITE OF SPECIFICATION 240
SCALE 1/4

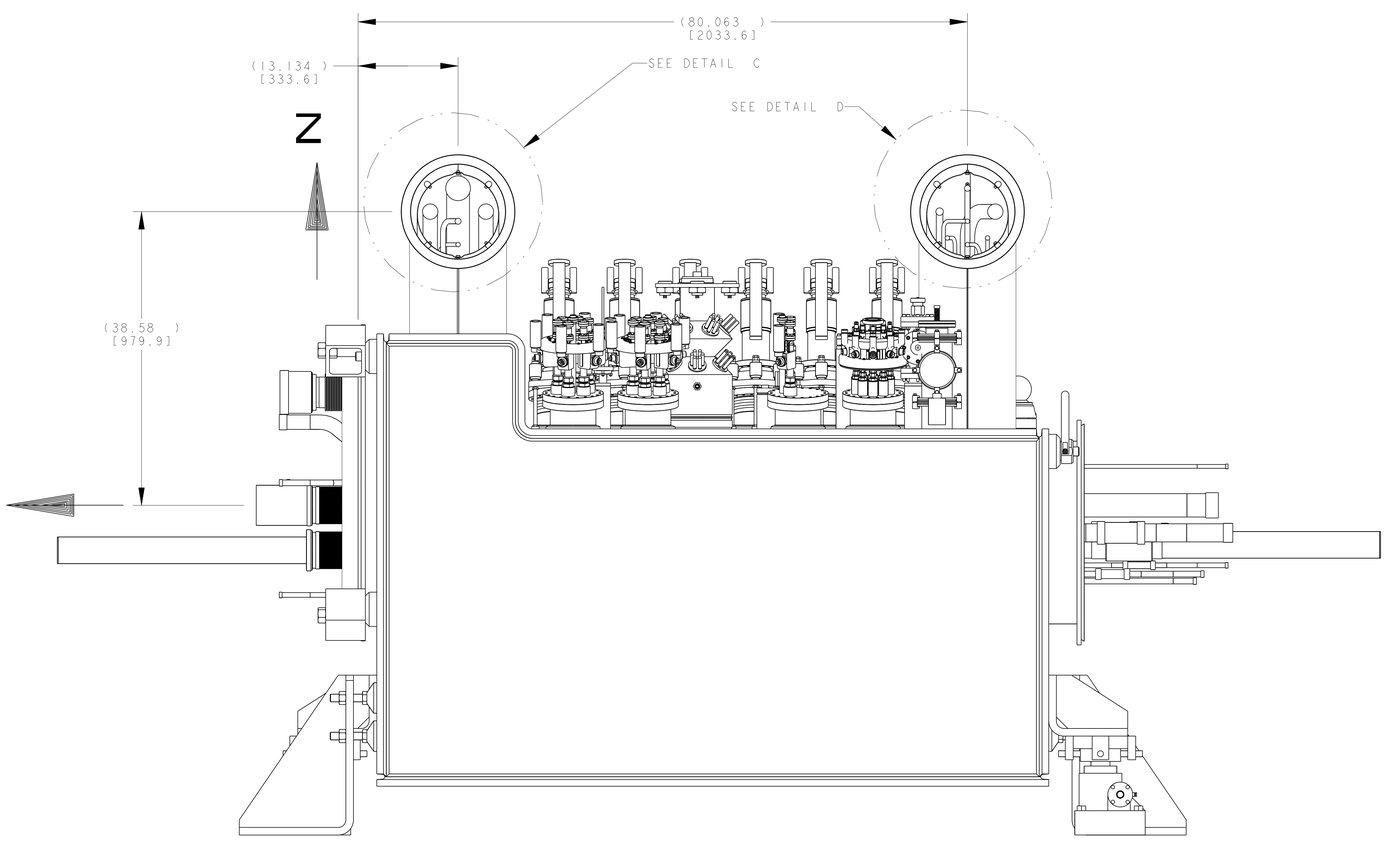

VIEW M - M
ROTATED 180°

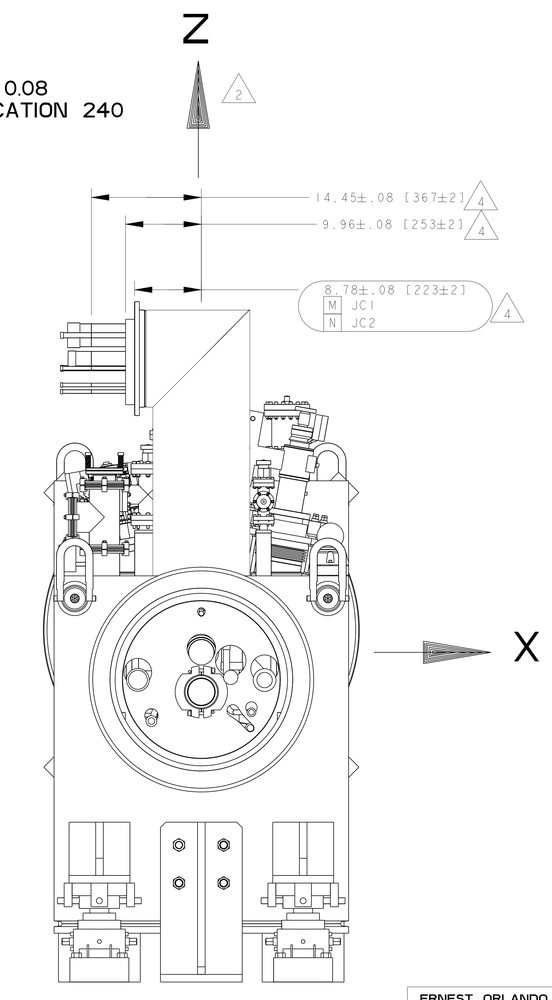

THIRD ANGLE PROJECTION

ERNEST ORLANDO LAWRENCE
BERKELEY NATIONAL LABORATORY
UNIVERSITY OF CALIFORNIA - BERKELEY

LHC IR FEEDBOX
MAJOR ASSEMBLY
DFBXC FEED BOX ASSY SKEL

MICROFILMED:	DWG. TYPE	SHOWN ON	SCALE: 3/50	DO NOT SCALE PRINTS
	PART	.	SHEET 7 OF 11	
PATENT CLEAR:	DESIGN ACCT. NO.	CATEGORY CODE	DWG. NO.	SIZE / REV.
	Z5LCE2	LH2001	24C3526	A

DWG. NO. 24C3526 SIZE A REV 7 SH

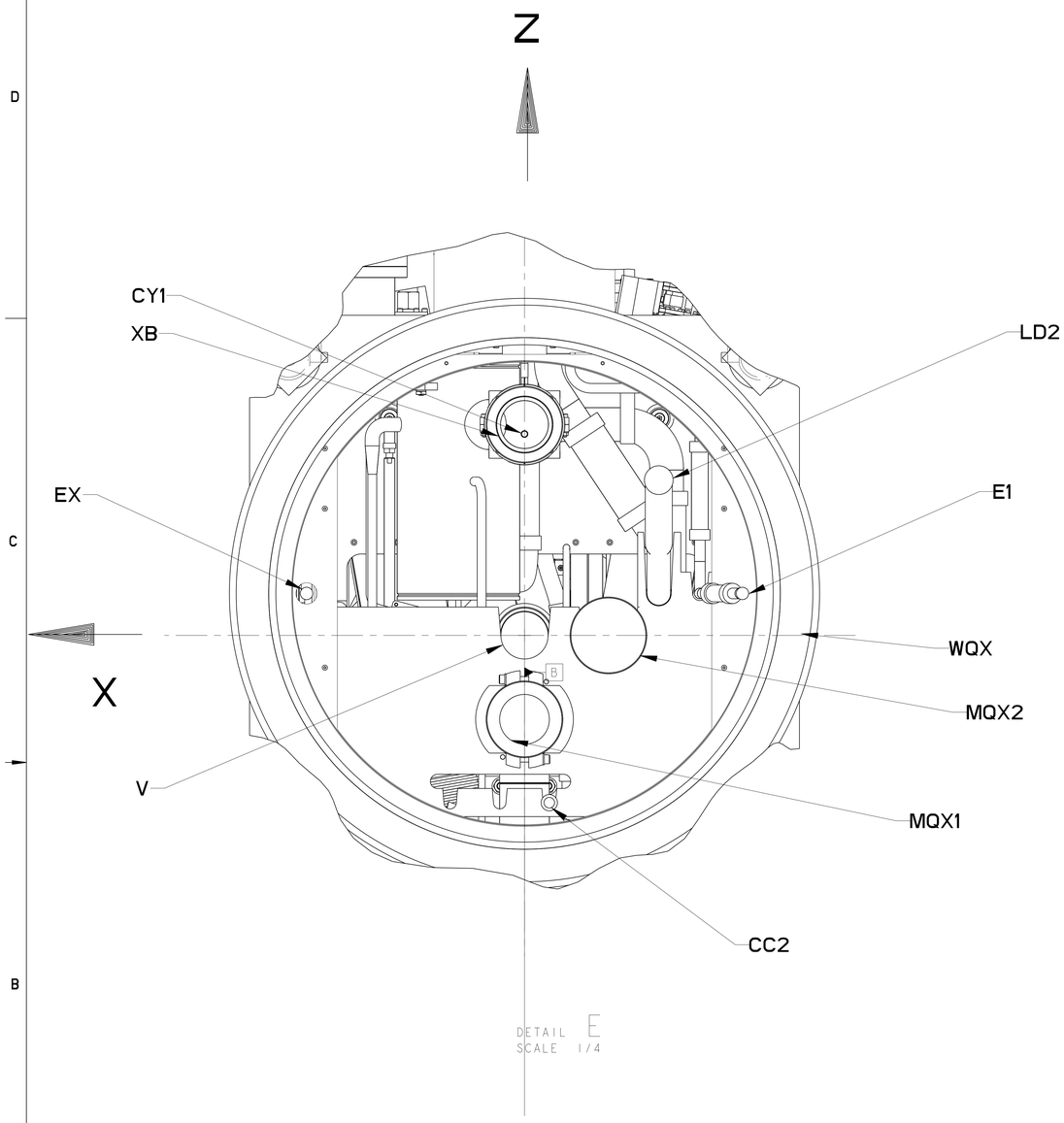

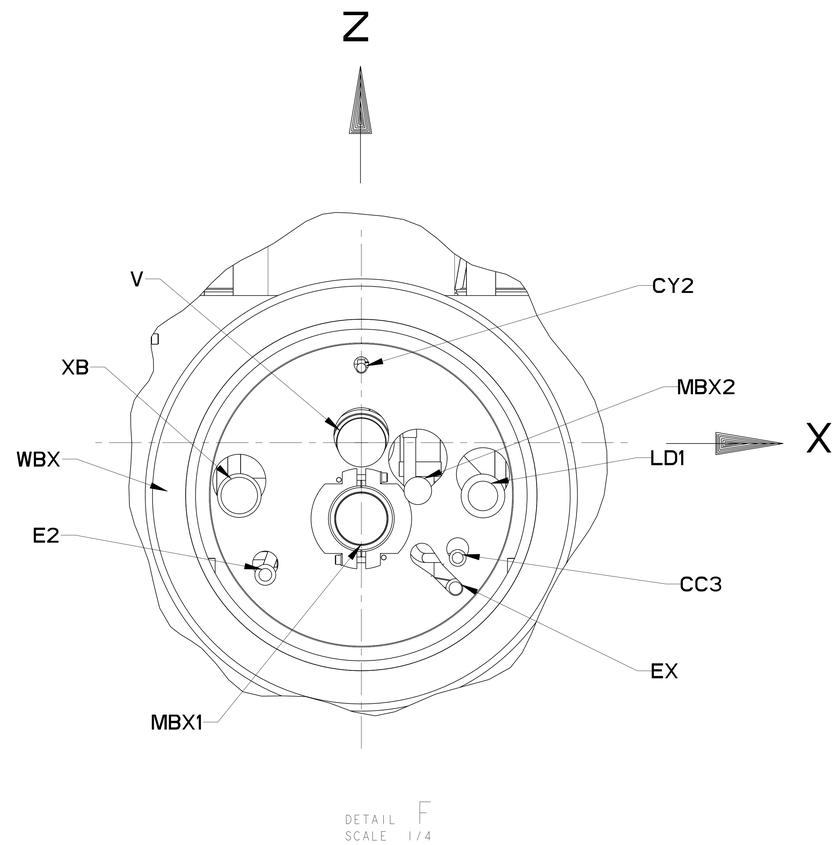

Q3 PIPING INTERFACE
PER SPEC. LHC-DFBX-ES-210.00 REV 1.0

DFBX	PIPE OD/ID		PIPE COORDINATES AT 300 K		
DFBX	OD in [mm]	ID in [mm]	X in [mm] ±.08	Z in [mm] ±.08	Y in [mm] ±.08
V	3.071 [78]	2.913 [73.99]	.000 [0]	.000 [0]	2.032 [51.61]
LD2	1.748 [44.4]	1.650 [41.91]	-9.449 [-240]	10.925 [277.5]	6.299 [159.99]
CC3	.626 [15.9]	.528 [13.41]	1.744 [44.3]	-11.772 [-299.01]	6.299 [159.99]
CC2	.626 [15.9]	.528 [13.41]	-1.744 [-44.3]	-11.772 [-299.01]	6.299 [159.99]
CY1	.626 [15.9]	.528 [13.41]	.000 [0]	14.173 [359.99]	6.299 [159.99]
E1	1.500 [38.1]	1.370 [34.8]	-15.339 [-389.61]	2.953 [75.01]	6.299 [159.99]
EX	1.500 [38.1]	1.370 [34.8]	15.339 [389.61]	2.953 [75.01]	6.299 [159.99]
MQX1	3.500 [88.9]	3.370 [85.6]	.000 [0]	-5.906 [-150.01]	6.299 [159.99]
MQX2	3.500 [88.9]	3.370 [85.6]	-5.906 [-150.01]	.000 [0]	6.299 [159.99]
WQX	41.535 [1055]	35.039 [890]	.000 [0]	2.953 [75.01]	.000 [0]
XB	3.500 [88.9]	3.370 [85.6]	.000 [0]	14.839 [376.91]	6.299 [159.99]

D1 PIPING INTERFACE
PER SPEC. LHC-DFBX-ES-230.00 REV 1.1

PIPE DESIGNATION		PIPE OD/ID		PIPE COORDINATES AT 300 K		
LBX	DFBX	OD in [mm]	ID in [mm]	X in [mm] ±.08	Z in [mm] ±.08	Y in [mm] ±.08
V	V	3.06 [77.7]	2.91 [73.9]	.000 [0]	.000 [0]	-13.504 [-343]
c	LD1	1.75 [44.5]	1.66 [42.2]	8.311 [211.1]	-3.642 [-92.51]	-13.465 [-342.01]
c'	CC2 END TRANSITION	.63 [16] .50 [12.7]	.53 [13.5] .41 [10.4]	5.429 [137.9]	.811 [20.6]	-14.843 [-377.01]
-----	CC3	.63 [16]	.53 [13.5]	6.583 [167.21]	-7.874 [-200]	-14.843 [-377.01]
cy	CY2 END TRANSITION	.63 [16] .50 [12.7]	.53 [13.5] .41 [10.4]	.000 [0]	5.114 [129.9]	-14.843 [-377.01]
cyt	-----	-----	-----	-----	-----	-----
e1	Ex	1.50 [38.1]	1.38 [35.1]	6.437 [163.5]	-9.945 [-252.6]	-11.693 [-297]
e2	E2	1.50 [38.1]	1.38 [35.1]	-6.559 [-166.6]	-9.031 [-229.39]	-11.693 [-297]
m/c	MBX1	3.50 [88.9]	3.38 [85.9]	.000 [0]	-5.193 [-131.9]	-1.732 [-43.99]
i	MBX2 END TRANSITION	.50 [12.7] 1.47 [37.3]	.38 [9.7] 1.34 [34]	3.862 [98.09]	-3.287 [-83.49]	-5.465 [-138.81]
W	WBX	29.53 [750.1]	23.50 [596.9]	.000 [0]	-3.528 [-89.61]	.000 [0]
xb	-----	-----	-----	-----	-----	-----
xbt	XB END TRANSITION	2.88 [73.2] 2.00 [50.8]	2.72 [69.1] 1.88 [47.8]	-8.339 [-211.81]	-3.614 [-91.8]	-13.465 [-342.01]

15

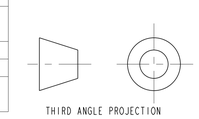

THIRD ANGLE PROJECTION

ERNEST ORLANDO LAWRENCE BERKELEY NATIONAL LABORATORY
UNIVERSITY OF CALIFORNIA - BERKELEY

LHC IR FEEDBOX
MAJOR ASSEMBLY
DFBXC FEED BOX ASSY SKEL

MICROFILMED:	DWG. TYPE PART	SHOWN ON .	SCALE: 3/50	DO NOT SCALE PRINTS
			SHEET 8 OF 11	
PATENT CLEAR:	DESIGN ACCT. NO. Z5LCE2	CATEGORY CODE LH2001	DWG. NO. 24C3526	SIZE A REV.

DWG. NO. 24C3526 SIZE A REV. 8

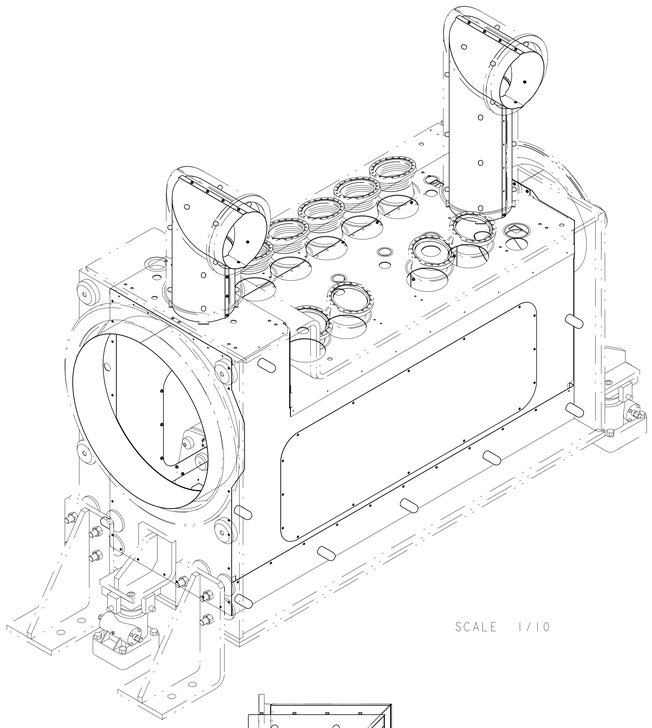

SCALE 1/10

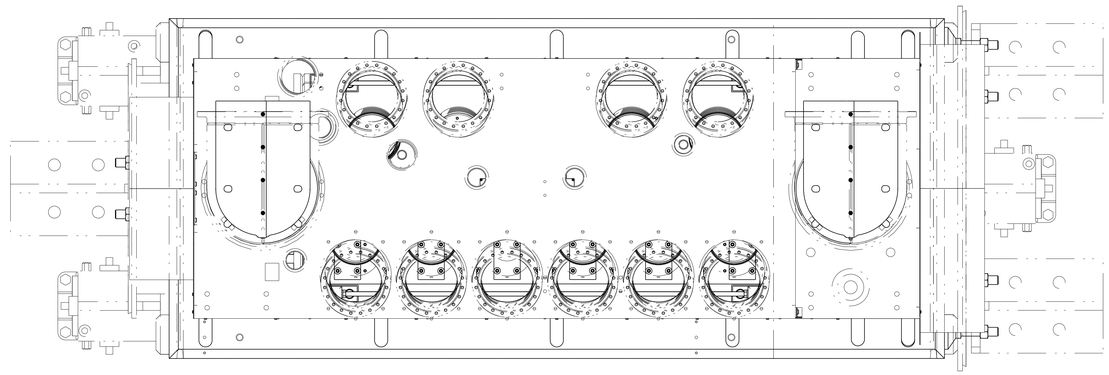

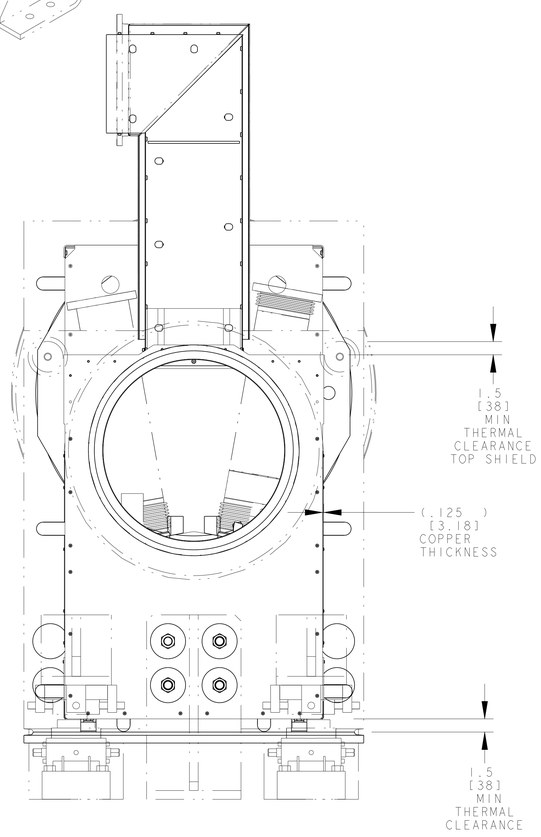

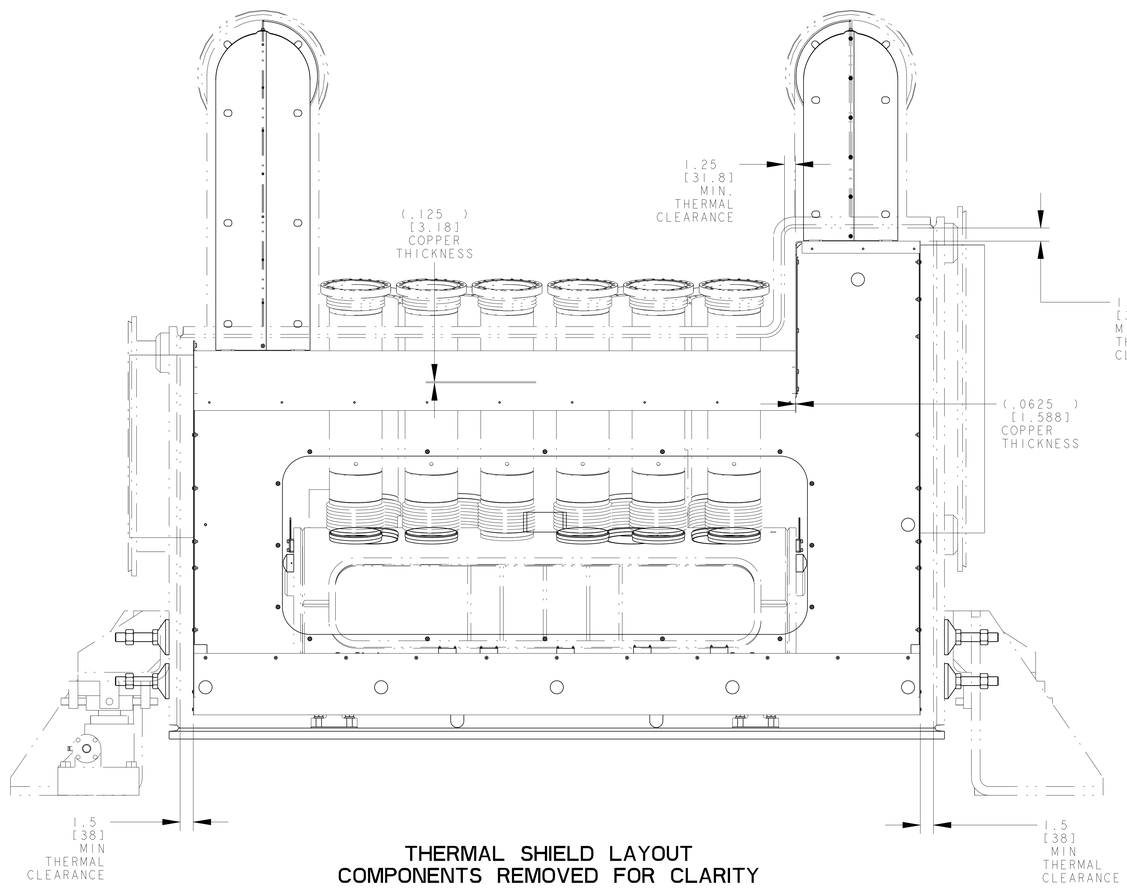

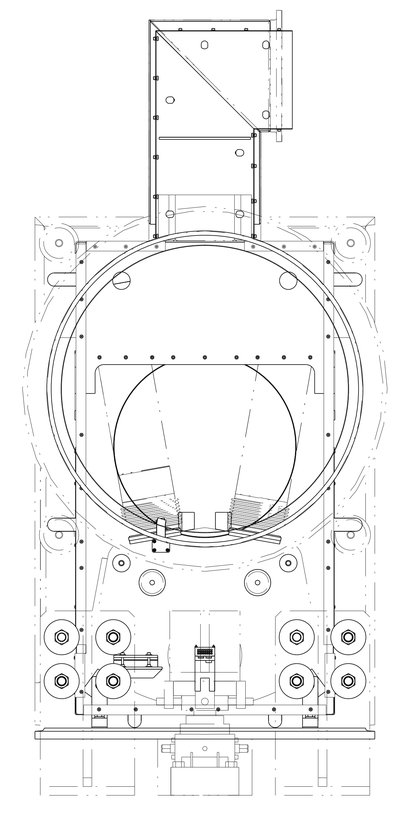

THERMAL SHIELD LAYOUT
COMPONENTS REMOVED FOR CLARITY
SCALE 3/20

THIRD ANGLE PROJECTION

ERNEST ORLANDO LAWRENCE
BERKELEY NATIONAL LABORATORY
UNIVERSITY OF CALIFORNIA - BERKELEY

LHC IR FEEDBOX
MAJOR ASSEMBLY
DFBXC FEED BOX ASSY SKEL

MICROFILMED:	DWG. TYPE	SHOWN ON	SCALE: 3/50	DO NOT SCALE PRINTS
	PART	.	SHEET 9 OF 11	
PATENT CLEAR:	DESIGN ACCT. NO.	CATEGORY CODE	DWG. NO.	SIZE / REV.
	Z5LCE2	LH2001	24C3526	A

DWG. NO. 24C3526 SHT 9 REV A

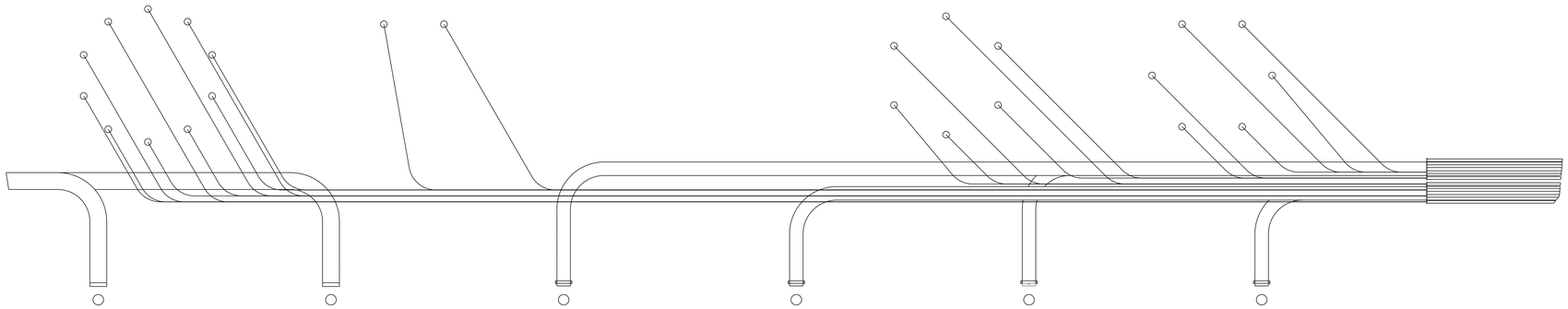

BUS CONDUCTOR RUNS

DETAIL N
SCALE 1/2

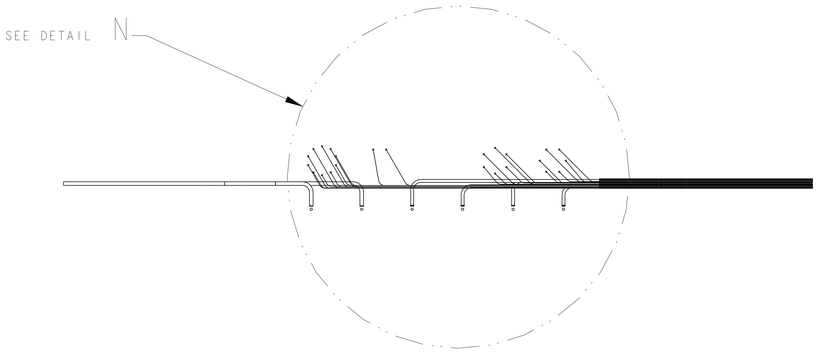

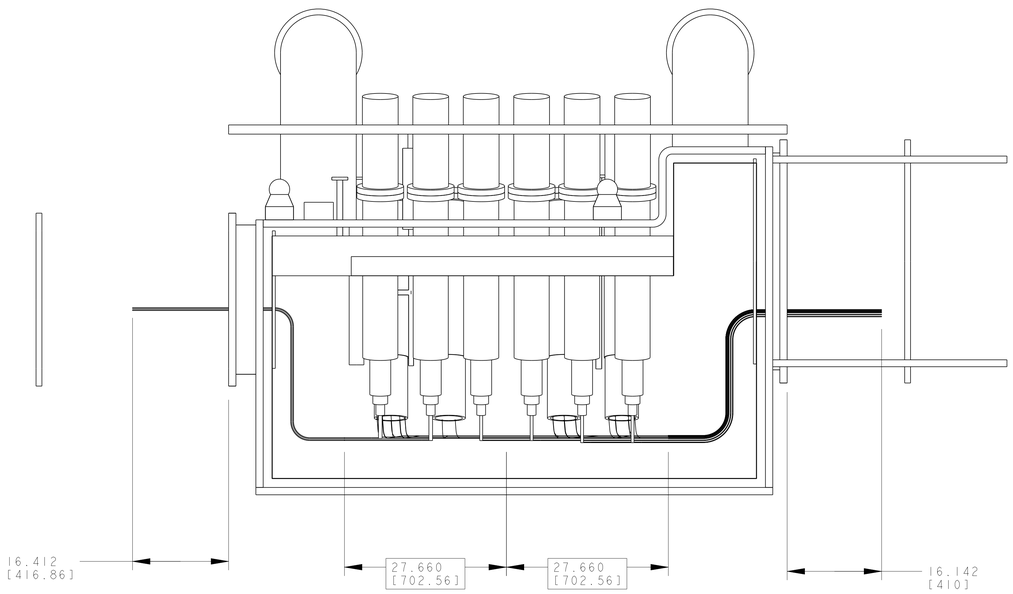

SCALE 1/10

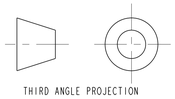

THIRD ANGLE PROJECTION

ERNEST ORLANDO LAWRENCE
BERKELEY NATIONAL LABORATORY
UNIVERSITY OF CALIFORNIA - BERKELEY

LHC IR FEEDBOX
MAJOR ASSEMBLY
DFBXC FEED BOX ASSY SKEL

MICROFILMED:	DWG. TYPE	SHOWN ON	SCALE: 3/50	DO NOT SCALE PRINTS
	PART	.	SHEET 10 OF 11	
PATENT CLEAR:	DESIGN ACCT. NO.	CATEGORY CODE	DWG. NO.	SIZE / REV.
	Z5LCE2	LH2001	24C3526	A

DWG. NO. 24C3526 SIZE A REV. 10

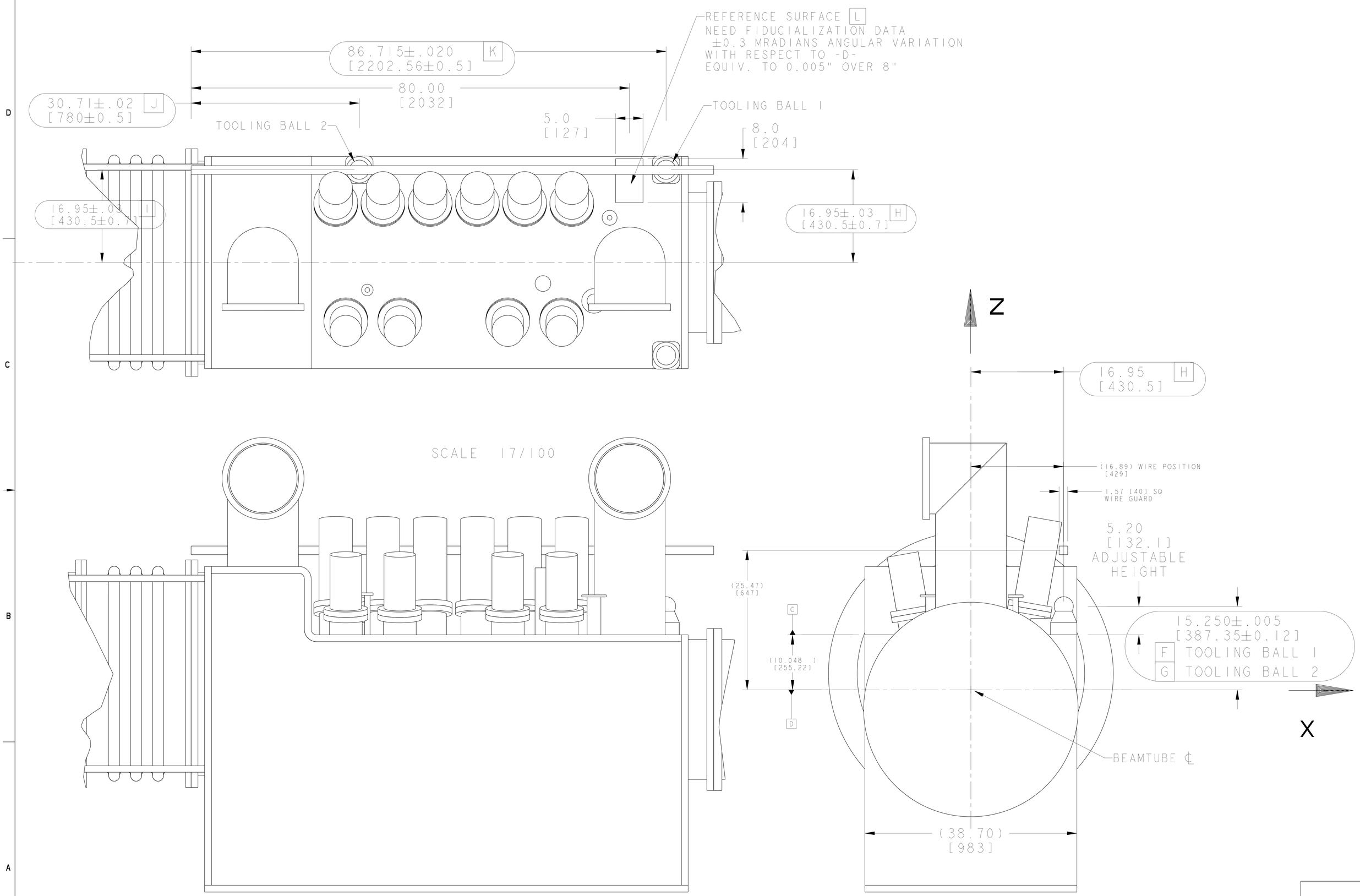

FIDUCIAL LAYOUT INFORMATION

THIRD ANGLE PROJECTION

ERNEST ORLANDO LAWRENCE
BERKELEY NATIONAL LABORATORY
UNIVERSITY OF CALIFORNIA - BERKELEY

LHC IR FEEDBOX
MAJOR ASSEMBLY
DFBXC FEED BOX ASSY SKEL

MICROFILMED:	DWG. TYPE	SHOWN ON	SCALE: 3/50	DO NOT SCALE PRINTS
	PART	.	SHEET 11 OF 11	
PATENT CLEAR:	DESIGN ACCT. NO.	CATEGORY CODE	DWG. NO.	SIZE / REV.
	Z5LCE2	LH2001	24C3526	A

DWG. NO. 24C3526 SIZE/REV. A 11