NOTE:
1. DERIVED FROM SPECIFICATION LHC-DFBX-ES-100
2. DERIVED FROM SPECIFICATION LHC-DFBX-ES-200
3. DERIVED FROM SPECIFICATION LHC-DFBX-ES-210
4. DERIVED FROM SPECIFICATION LHC-DFBX-ES-240
5. DERIVED FROM SPECIFICATION LHC-DFBX-ES-260
6. DERIVED FROM SPECIFICATION LHC-DFBX-ES-250
7. DERIVED FROM SPECIFICATION LHC-DFBX-ES-230
8. FILL MOUNTING HOLES WITH EPOXY
9. HTS CURRENT LEAD IN SPECIFICATION M923B

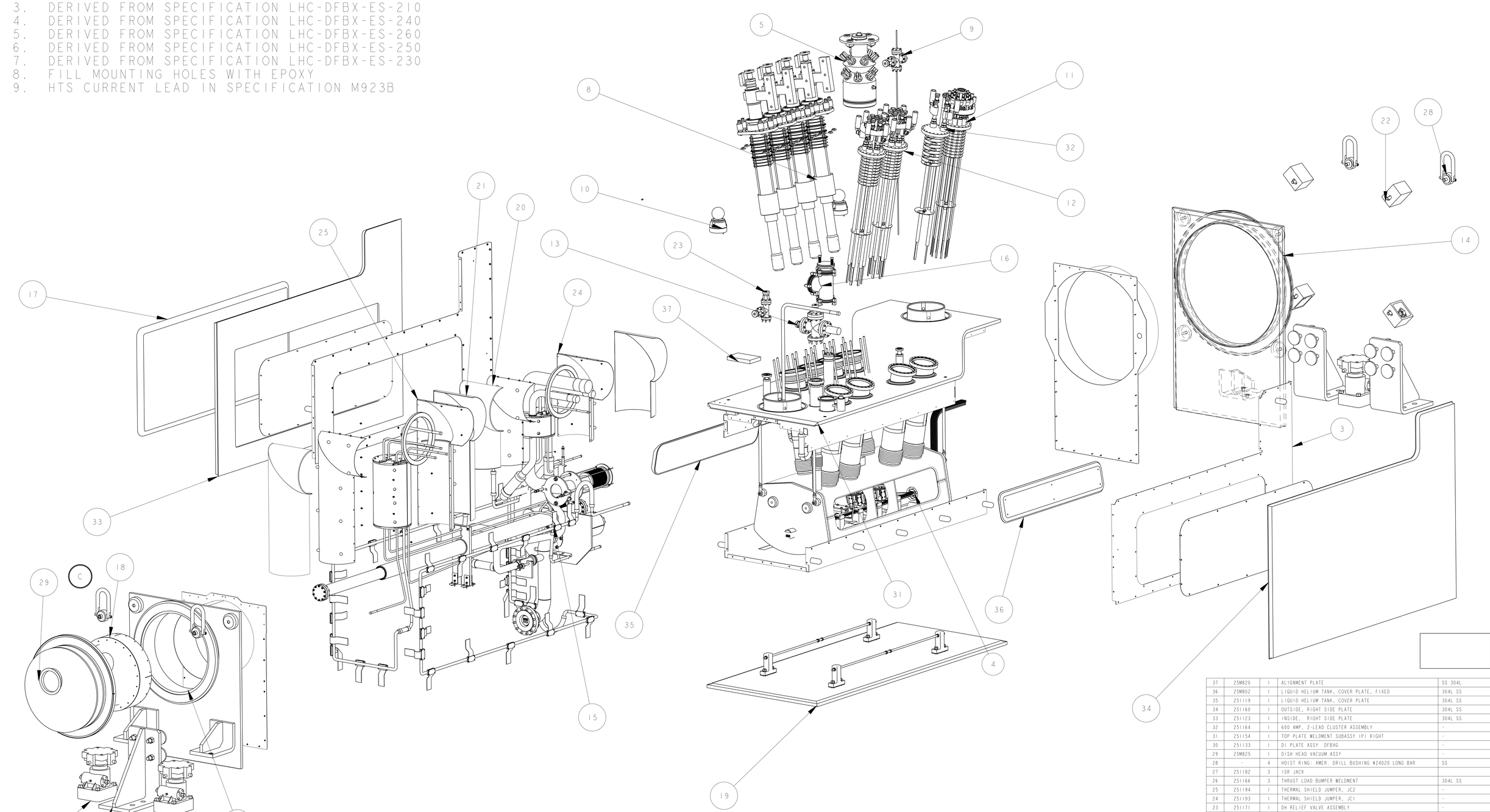

SCALE 1/10

ITEM	PART NO	REQD	DESCRIPTION	MATERIAL
37	25M820	1	ALIGNMENT PLATE	SS 304L
36	25M802	1	LIQUID HELIUM TANK, COVER PLATE, FIXED	304L SS
35	251119	1	LIQUID HELIUM TANK, COVER PLATE	304L SS
34	251160	1	OUTSIDE, RIGHT SIDE PLATE	304L SS
33	251123	1	INSIDE, RIGHT SIDE PLATE	304L SS
32	251164	1	600 AMP, 2-LEAD CLUSTER ASSEMBLY	-
31	251154	1	TOP PLATE WELDMENT SUBASSY IPI RIGHT	-
30	251133	1	DI PLATE ASSY DFBXG	-
29	25M825	1	DISH HEAD VACUUM ASSY	-
28	-	4	HOIST RING: AMER. DRILL BUSHING #24020 LONG BAR	SS
27	251182	3	ISR JACK	
26	251166	3	THRUST LOAD BUMPER WELDMENT	304L SS
25	251194	1	THERMAL SHIELD JUMPER, JC2	-
24	251193	1	THERMAL SHIELD JUMPER, JC1	-
23	251171	1	DH RELIEF VALVE ASSEMBLY	-
22	251179	4	Q3 MOUNTING BRACKET KIT	
21	251167	1	ENCLOSURE JUMPER, JC2	-
20	251168	1	ENCLOSURE JUMPER, JC1	-
19	251858	1	BASE PLATE ASSY	-
18	25M822	1	THERMAL CAP ASSY	-
17	251125	1	SIDE PLATE COVER	304L SS
16	251910	1	ROUGHING PORT ASSEMBLY	-
15	251871	1	PIPING DFBXB IPI, RIGHT 24C350	-
14	251129	1	Q3 PLATE ASSY	-
13	251339	1	HELIUM PORT RELIEF VALVE ASSEMBLY	-
12	24C353	2	600 AMP,6 LEAD VAPOR COOLED ASSY	-
11	24C322	1	120 AMP VC LEAD MOUNTING ASSY	-
10	251868	2	TOOLING BALL, LHCQ1MSA00092	-
9	251162	1	LHE DIAGNOSTIC ASSY	-
8	251156	6	PIRELLI HTS LEAD KIT	-
5	251831	1	LQX DIAGONSTIC ASSEMBLY	-
4	251864	1	BUS DUCT ASSEMBLY	-
3	251079	1	THERMAL SHIELD ASSY, DFBXG	-

11. SOLDER JOINT USING SN60PB40 SOLDER; ROSIN FLUX, USE SPLICE PLATE IF REQUIRED
12. CLOSEOUT WELD PROCEDURE TO BE APPROVED BY LBNL
    DISTORTION CONTROL IS ESSENTIAL, ROOT PASS GTAW, COVER PASSES GMAW, SMAW, FCMAW.
13. WELD PROCEDURE TO BE APPROVED BY LBNL, USE GTAW PROCESS
14. BELLOWS TO BE WITHIN 0.03" OF FREE CONFIGURATION AFTER CLOSEOUT WELDING
15. DIMENSIONS FROM DFBX FLANGE FACE ON DI SIDE, ADD -2367.2 MM TO OBTAIN POSITION RELEATIVE TO DFBX COORDINATE SYSTEM
16. SHIM TANK SUPPORTS TO LIMIT STATIC DEFLECTION OF THE LOWER TANK SUPPORT RODS TO LESS THAN 0.25"
17. DIMENSIONS SHOW IN INSPECTION OVAL ARE REFERENCED IN THE FABRICATION TRAVELER
18. COPPER STRAP ATTACHED TO THE THERMAL ANCHORS DO NOT HAVE TO BE EVENLY SPACED.
19. ALL DIMENSIONS GIVEN AT ROOM TEMPERATURE

THIRD ANGLE PROJECTION

REV	DWG	CHK	ZONE	DATE	CHANGES
C	JDRDPO			03/03/03	CHANGED PIPE END LOCATIONS CHANGED WELD ON SIDE PLATE COVER ADDED DISH HEAD VACUUM ASSY
B	JDRDPO			12/13/02	INITIAL RELEASE
A	JDRDPO			10/03/02	PRELIMINARY RELEASE

UNLESS OTHERWISE SPECIFIED
DECIMALS: X.X ± 0.1 FRAC. ± 1/64; X.XX ± 0.03 Angles ± 1.00°; X.XXX ± 0.010 FINISH 125 µin
DO NOT SCALE PRINT
THREADS ARE CLASS 2
CHAMFER ENDS OF ALL SCREW THEADS 30°
CUT ROUND, 1.5 THREAD RELIEF ON MACHINED THREADS
BREAK EDGES .016 MAX. ON MACHINED WORK
REMOVE BURRS, WELD SPLATTER & LOOSE SCALE
IN ACCORDANCE WITH ASME Y14.5M & B46.1

SHOP ORDERS
ACCT NO. / REQD / DATE ISSD / DEL TO / DATE REQD / SURFACE TREATMT / IDENT METHOD / PROJECT NUMBER / NAME N/A
DWG BY M J KNOLLS DATE 02-Nov-01
CHK BY Jon Zbasnik DATE 03-OCT-02
APP BY Jon Zbasnik DATE 03-OCT-02

ERNEST ORLANDO LAWRENCE BERKELEY NATIONAL LABORATORY
UNIVERSITY OF CALIFORNIA · BERKELEY

LHC IR FEEDBOX
MAJOR ASSEMBLY
DFBXB (IP1, RIGHT) FEED BOX ASSY

MICROFILMED: PATENT CLEAR:
DWG. TYPE: ASSEM
SHOWN ON: -
DESIGN ACCT. NO.: Z5LCE2
CATEGORY CODE: LH2001
SCALE: 1:7/100 DO NOT SCALE PRINTS
SHEET 1 OF 11
DWG. NO. 24C3506 SIZE C REV

DWG. NO. 24C3506 SHT. 1 C

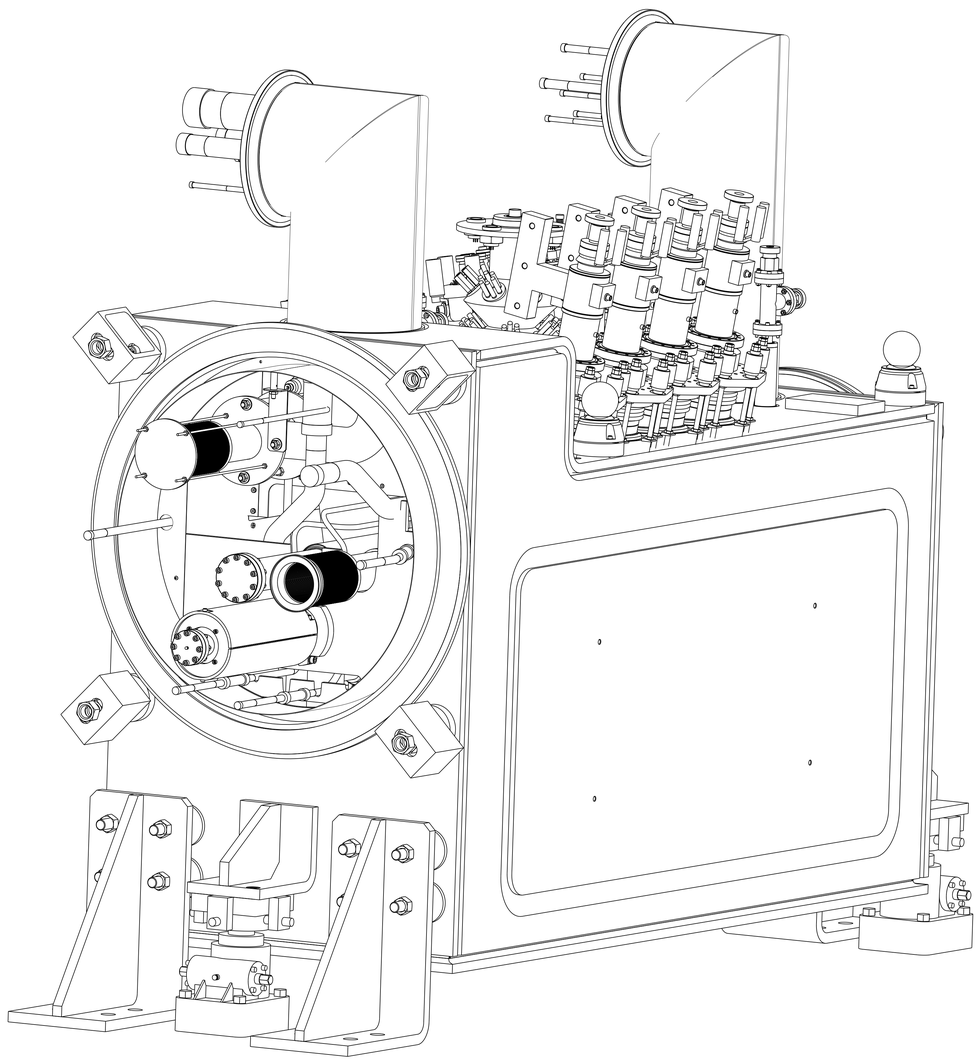

Q3 END

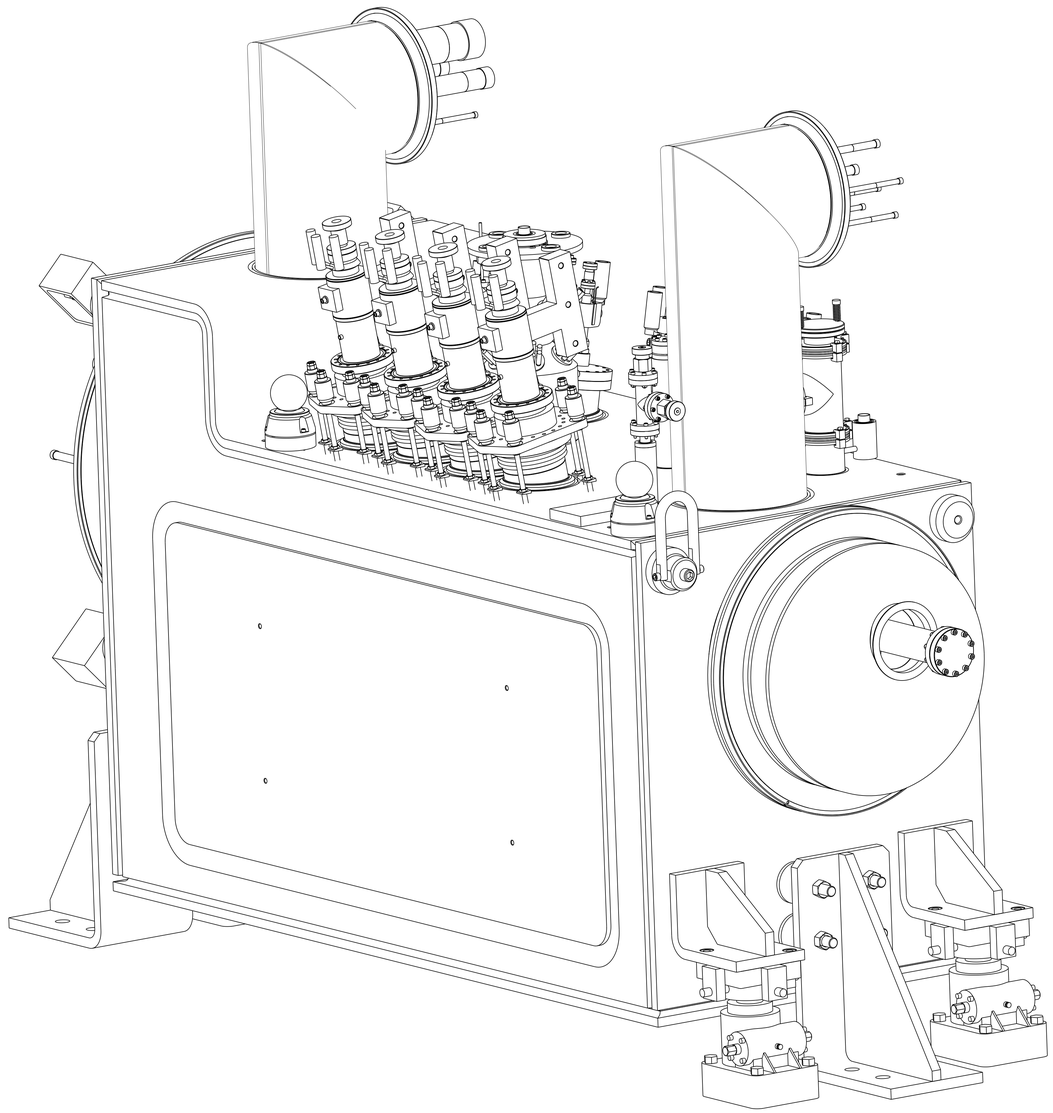

D1 END

DFBXB, IP1 (RIGHT)

THIRD ANGLE PROJECTION

ERNEST ORLANDO LAWRENCE
BERKELEY NATIONAL LABORATORY
UNIVERSITY OF CALIFORNIA - BERKELEY

LHC IR FEEDBOX
MAJOR ASSEMBLY
DFBXB (IP1, RIGHT) FEED BOX ASSY

MICROFILMED:	DWG. TYPE: ASSEM	SHOWN ON: -	SCALE: 9/50 DO NOT SCALE PRINTS
			SHEET 2 OF 11
PATENT CLEAR:	DESIGN ACCT. NO.: Z5LCE2	CATEGORY CODE: LH2001	DWG. NO.: 24C3506 SIZE: C REV.

DWG. NO. 24C3506 SHEET REV. 2 C

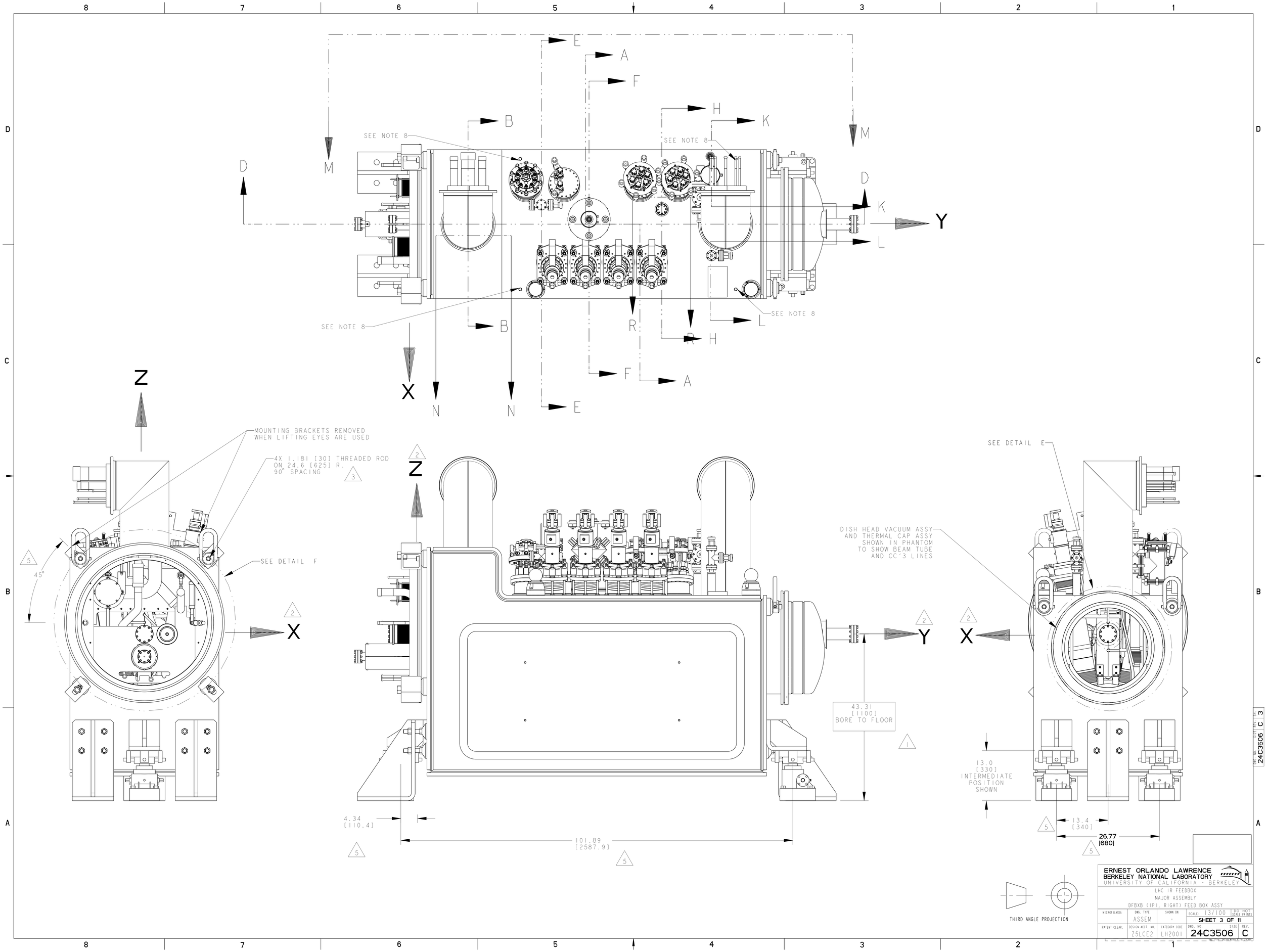

ERNEST ORLANDO LAWRENCE BERKELEY NATIONAL LABORATORY
UNIVERSITY OF CALIFORNIA - BERKELEY

LHC IR FEEDBOX
MAJOR ASSEMBLY
DFBXB (IP1, RIGHT) FEED BOX ASSY

MICROFILMED:	DWG. TYPE	SHOWN ON	SCALE: 13/100	DO NOT SCALE PRINTS
	ASSEM	-	SHEET 3 OF 11	
PATENT CLEAR:	DESIGN ACCT. NO.	CATEGORY CODE	DWG. NO.	SIZE / REV.
	Z5LCE2	LH2001	24C3506	C

DWG. NO. 24C3506 SIZE C REV. 3

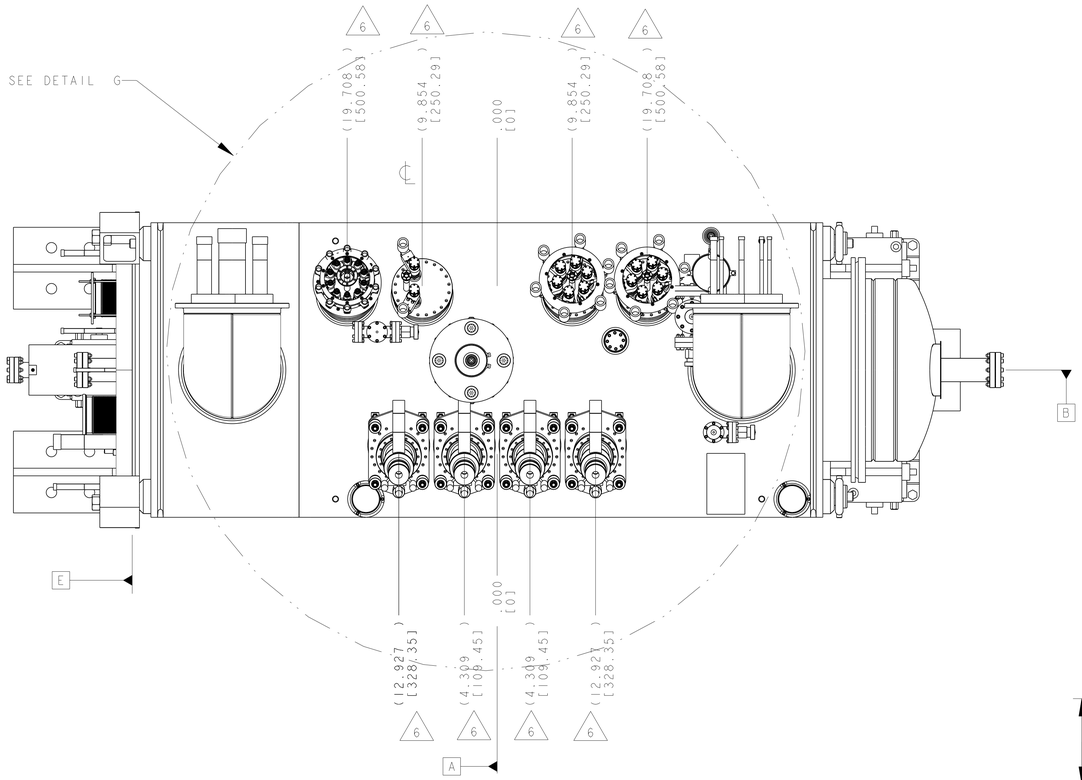

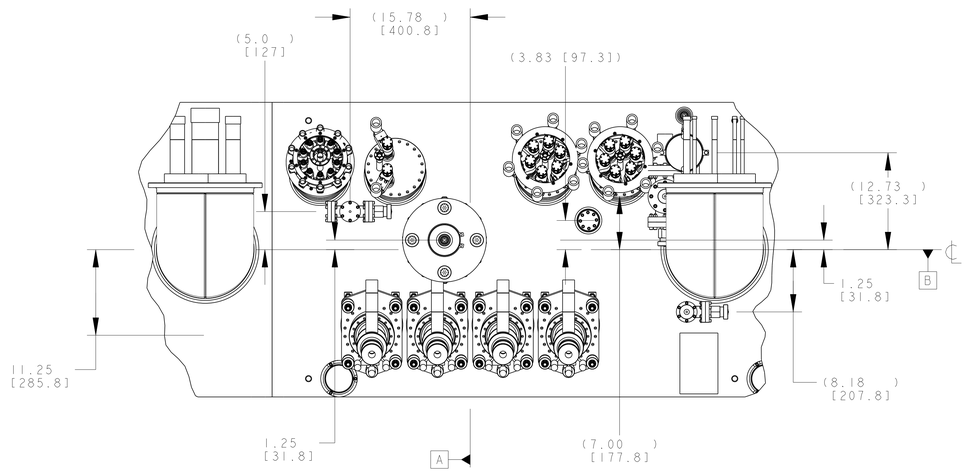

DETAIL G
SCALE 13/100

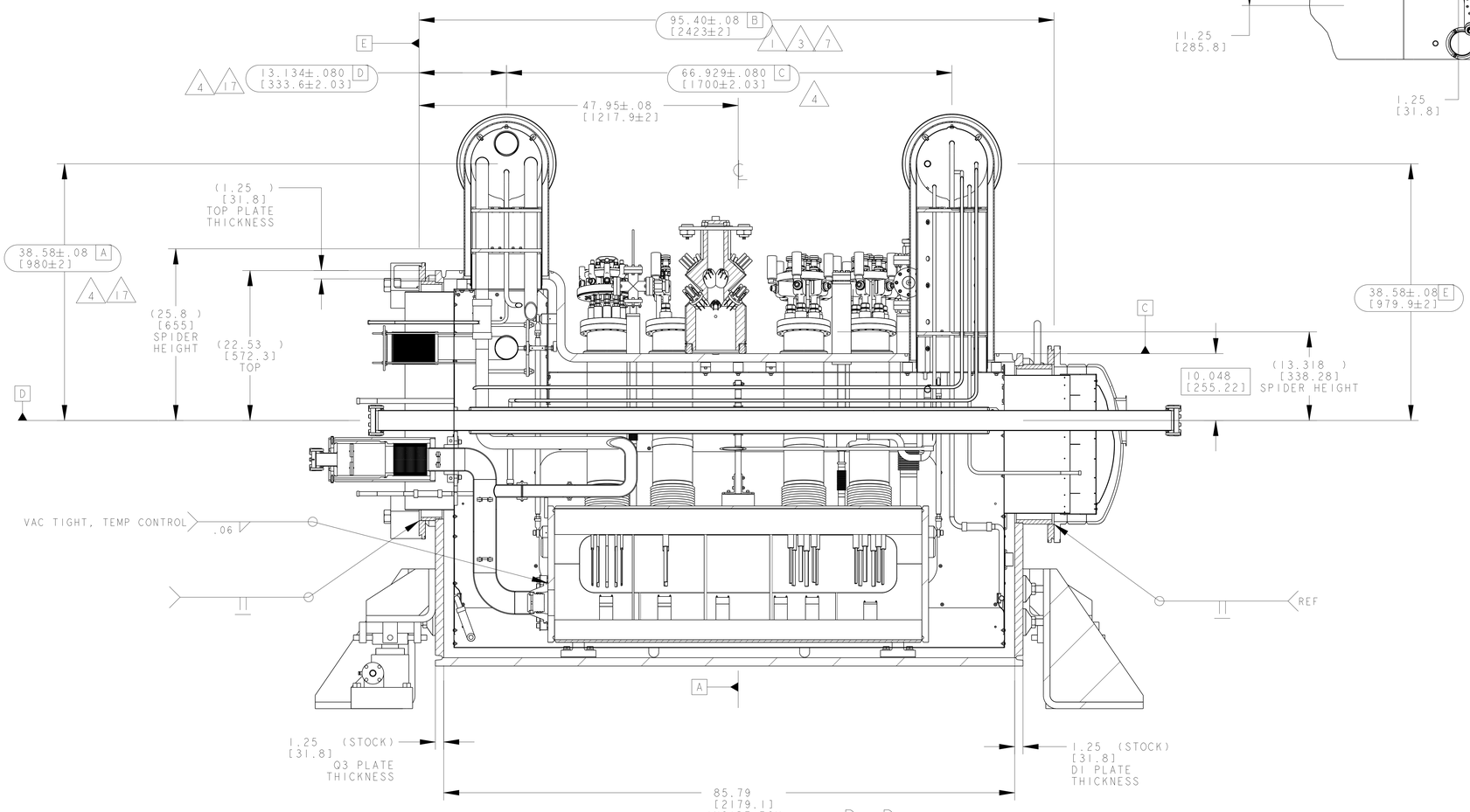

THIRD ANGLE PROJECTION

ERNEST ORLANDO LAWRENCE BERKELEY NATIONAL LABORATORY
UNIVERSITY OF CALIFORNIA - BERKELEY

LHC IR FEEDBOX
MAJOR ASSEMBLY
DFBXB (IP1, RIGHT) FEED BOX ASSY

MICROFILMED:	DWG. TYPE	SHOWN ON	SCALE: 13/100	DO NOT SCALE PRINTS
	ASSEM	-	SHEET 4 OF 11	
PATENT CLEAR:	DESIGN ACCT. NO.	CATEGORY CODE	DWG. NO.	SIZE / REV.
	Z5LCE2	LH2001	24C3506	C

DWG. NO. 24C3506 SIZE C SHT 4

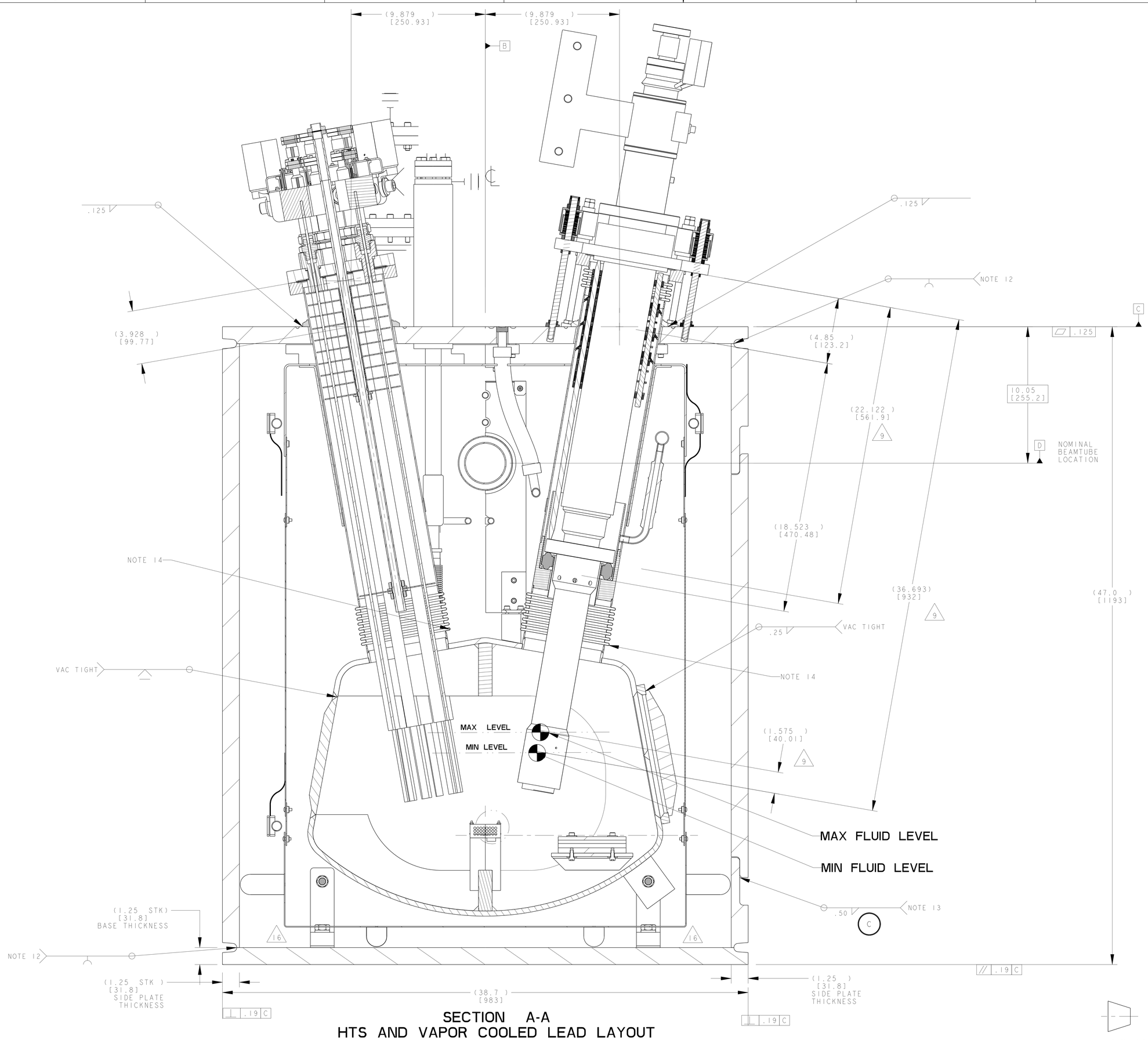

SECTION A-A
HTS AND VAPOR COOLED LEAD LAYOUT
SCALE 2/5

THIRD ANGLE PROJECTION

ERNEST ORLANDO LAWRENCE BERKELEY NATIONAL LABORATORY
UNIVERSITY OF CALIFORNIA - BERKELEY

LHC IR FEEDBOX
MAJOR ASSEMBLY
DFBXB (IP1, RIGHT) FEED BOX ASSY

MICROFILMED:	DWG. TYPE	SHOWN ON	SCALE: 13/100	DO NOT SCALE PRINTS
	ASSEM	-	SHEET 5 OF 11	
PATENT CLEAR:	DESIGN ACCT. NO.	CATEGORY CODE	DWG. NO.	SIZE / REV.
	Z5LCE2	LH2001	24C3506	C

DWG. NO. 24C3506 | SIZE / REV. C | SH. 5

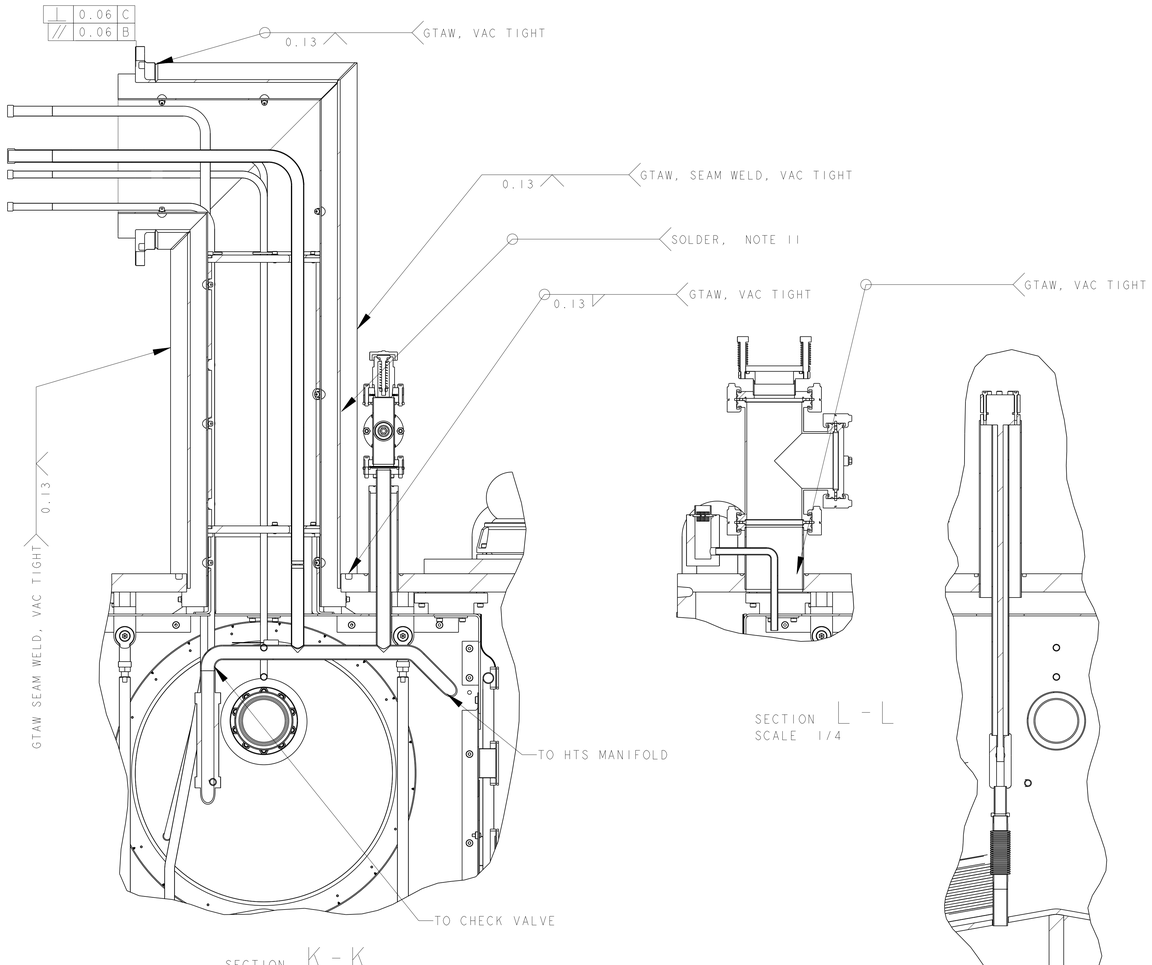

SECTION K - K
SCALE 1/4

SECTION L - L
SCALE 1/4

SECTION H - H
SCALE 1/4

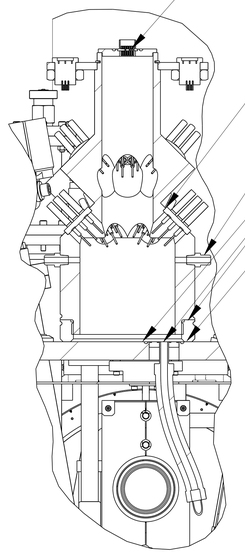

SECTION F - F
SCALE 1/4

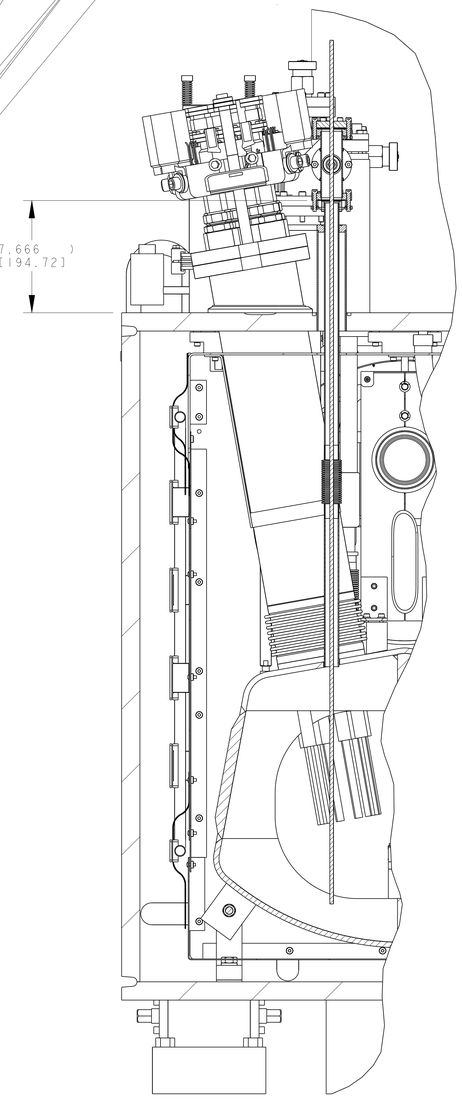

SECTION E - E
SCALE 1/4

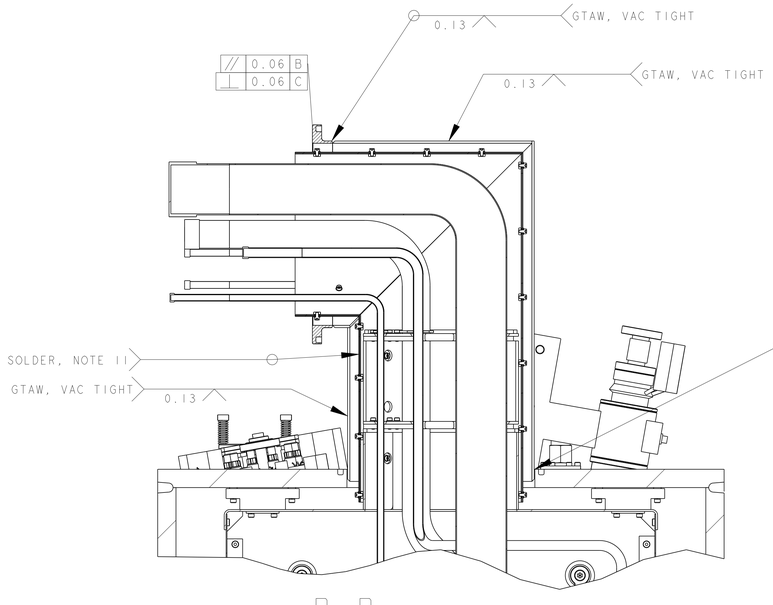

SECTION B - B
SCALE 1/4

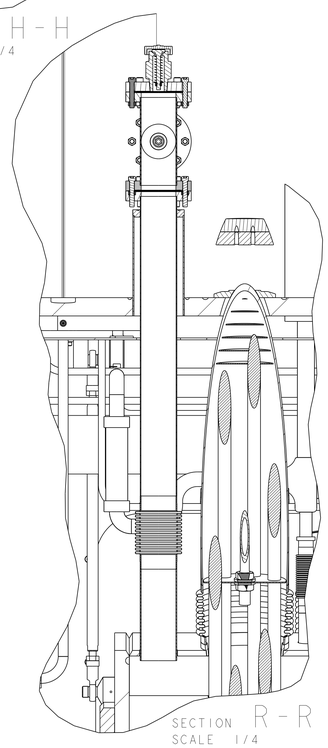

SECTION R - R
SCALE 1/4

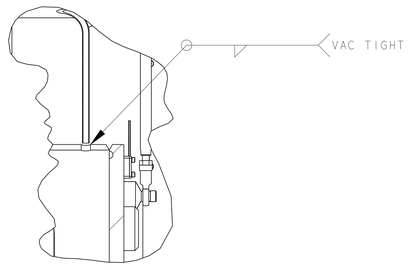

SECTION N - N
SCALE 1/4

ERNEST ORLANDO LAWRENCE
BERKELEY NATIONAL LABORATORY
UNIVERSITY OF CALIFORNIA - BERKELEY

LHC IR FEEDBOX
MAJOR ASSEMBLY
DFBXB (IP1, RIGHT) FEED BOX ASSY

MICROFILMED:	DWG. TYPE: ASSEM	SHOWN ON: -	SCALE: 1/100	DO NOT SCALE PRINTS
			SHEET 6 OF 11	
PATENT CLEAR:	DESIGN ACCT. NO.: Z5LCE2	CATEGORY CODE: LH2001	DWG. NO.: 24C3506	SIZE: C / REV.: C

DWG. NO. 24C3506 | SIZE | REV. | SH. C | 6

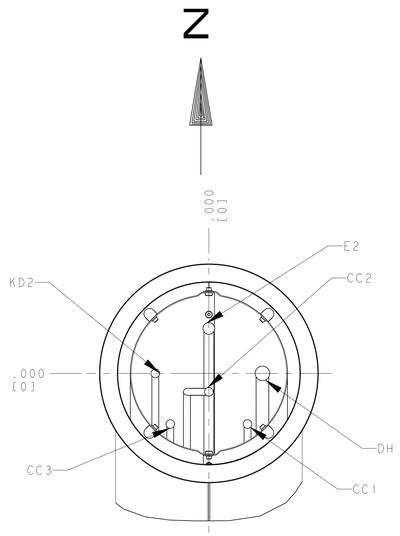

		DIM'S MEASURED FROM FLANGE CENTER	
PIPE	X	Y ±0.08	Z ±0.08
E2	-14.45±.08 [367±2]	0	3.07 [78]
DH	-14.45±.08 [367±2]	-3.66 [93]	0
KD2	-14.45±.08 [367±2]	3.66 [93]]	0
CC2	-14.45±.08 [367±2]	0	-1.26 [32]
CC1	-14.45±.08 [367±2]	-2.64 [67]	-3.46 [88]
CC3	-14.45±.08 [367±2]	2.64 [67]	-3.46 [88]

4

Y

DETAIL D
JC2 / QQSD
DIMENSIONAL TOLERANCE ± 0.08
ORIENTATION OPPOSITE OF SPECIFICATION 240
SCALE 1/4

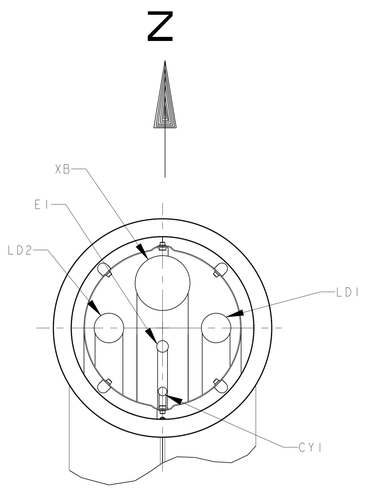

		DIM'S MEASURED FROM FLANGE CENTER	
PIPE	X	Y ±0.08	Z ±0.08
XB	-14.45±.08 [367±2]	0	3.07 [78]
LD2	-14.45±.08 [367±2]	3.66 [93]	0
LDI	-14.45±.08 [367±2]	-3.66 [93]	0
EI	-14.45±.08 [367±2]	0	-1.26 [32]
CYI	-14.45±.08 [367±2]	0	-4.33 [110]

4

Y

DETAIL C
JC1 / QQSC
DIMENSIONAL TOLERANCE ± 0.08
ORIENTATION OPPOSITE OF SPECIFICATION 240
SCALE 1/4

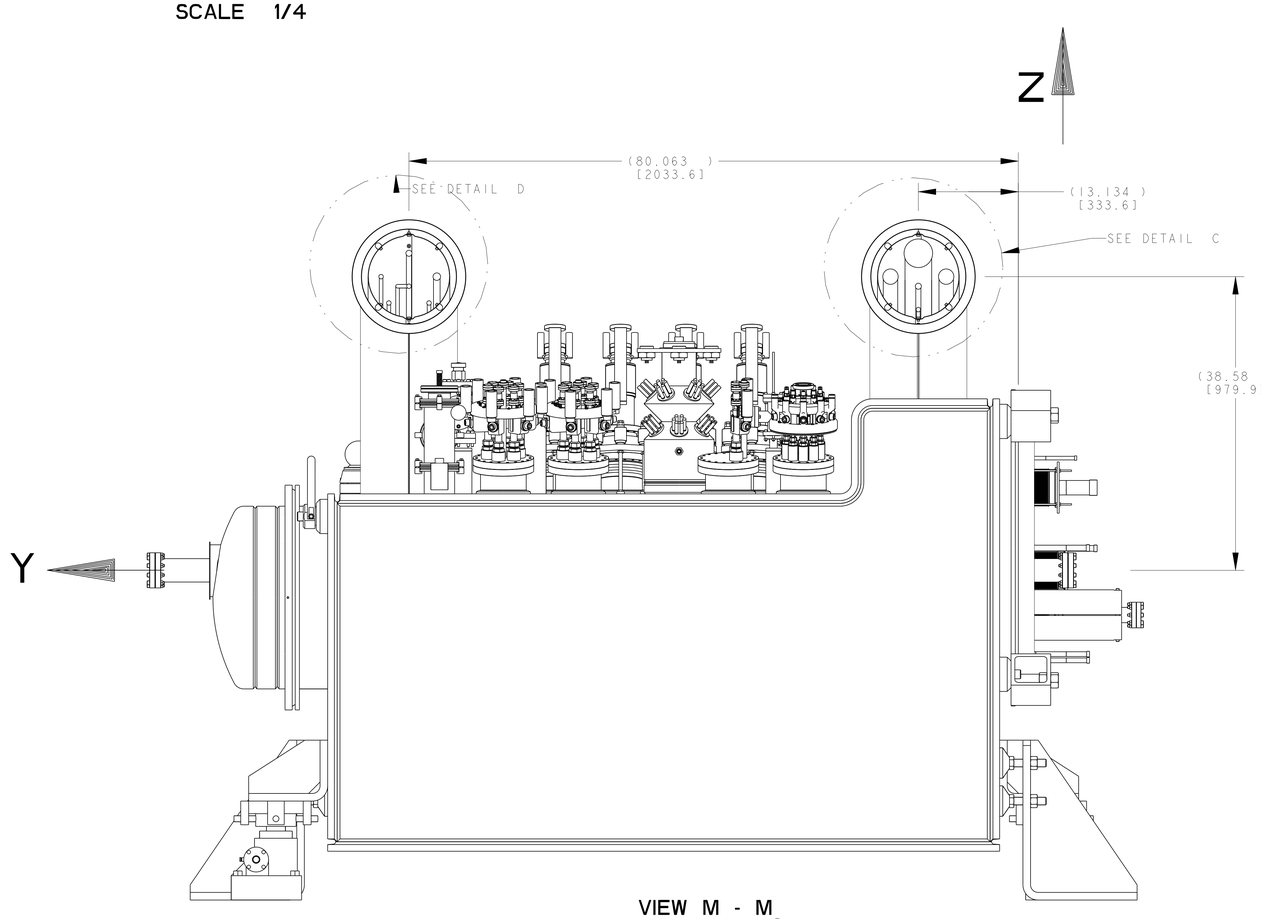

VIEW M - M
ROTATED 180°

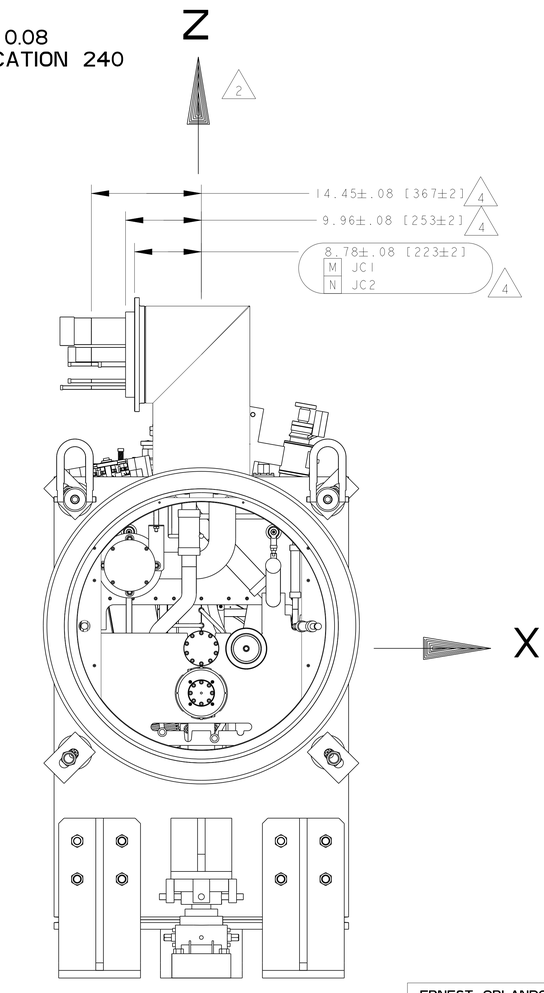

THIRD ANGLE PROJECTION

ERNEST ORLANDO LAWRENCE
BERKELEY NATIONAL LABORATORY
UNIVERSITY OF CALIFORNIA · BERKELEY

LHC IR FEEDBOX
MAJOR ASSEMBLY
DFBXB (IP1, RIGHT) FEED BOX ASSY

MICROFILMED:	DWG. TYPE: ASSEM	SHOWN ON: -	SCALE: 1:7/100	DO NOT SCALE PRINTS
			SHEET 7 OF 11	
PATENT CLEAR:	DESIGN ACCT. NO.: Z5LCE2	CATEGORY CODE: LH2001	DWG. NO.: 24C3506	REV: C

SIZE C | SHT 7
DWG. NO. 24C3506

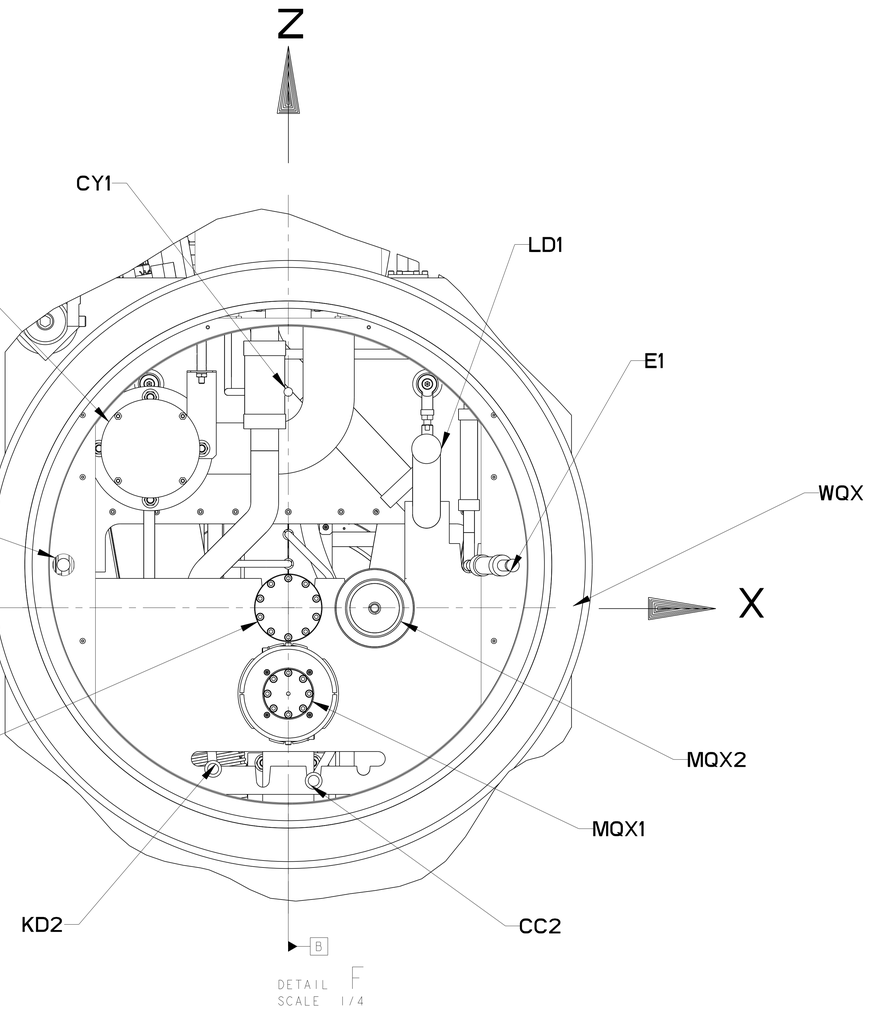

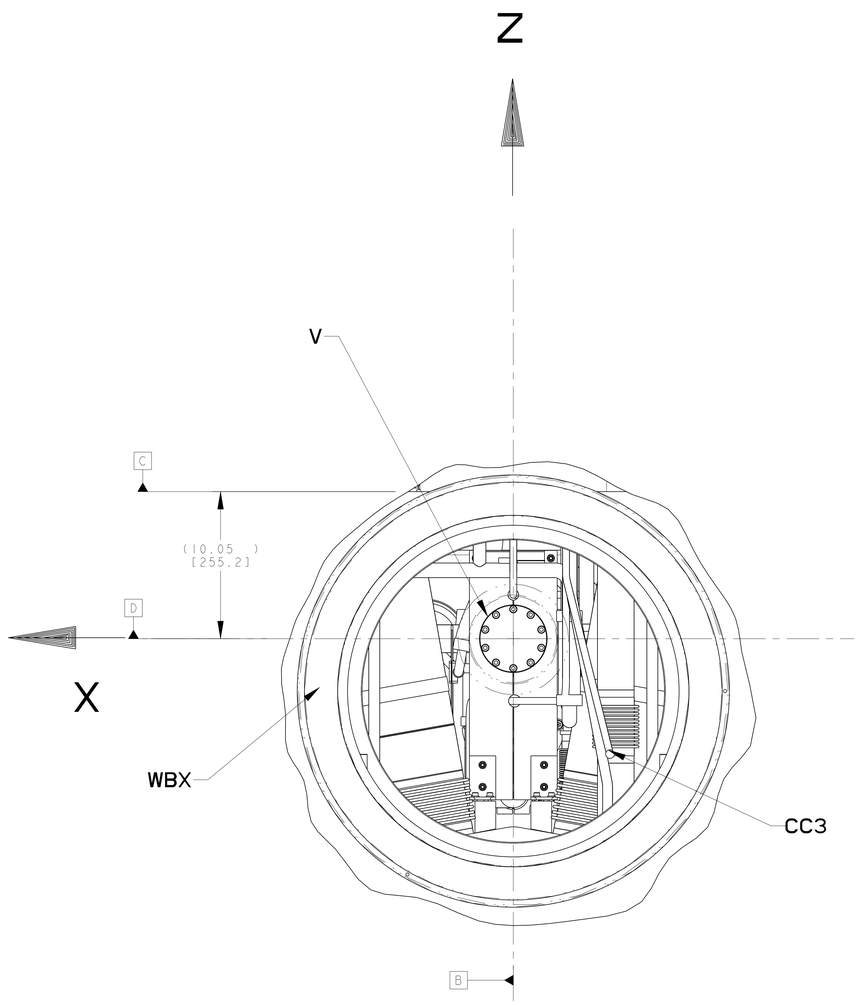

C

Q3 PIPING INTERFACE
PER SPEC. LHC-DFBX-ES-210.00 REV 1.0

DFBX	PIPE OD/ID		PIPE COORDINATES AT 300 K		
DFBX	OD in [mm]	ID in [mm]	X in [mm] ±.08	Z in [mm] ±.08	Y in [mm] ±.08
V	3.071 [78]	2.913 [73.99]	.000 [0]	.000 [0]	-2.032 [-51.61]
LD2	1.748 [44.4]	1.650 [41.91]	9.444 [239.88]	10.855 [275.72]	-6.299 [-159.99]
CC3	.626 [15.9]	.528 [13.41]	-1.735 [-44.07]	-11.772 [-299.01]	-6.299 [-159.99]
CC2	.626 [15.9]	.528 [13.41]	1.735 [44.07]	-11.822 [-300.28]	-6.299 [-159.99]
CY1	.626 [15.9]	.528 [13.41]	.000 [0]	14.742 [374.45]	-3.617 [-91.87]
E1	1.500 [38.1]	1.370 [34.8]	15.345 [389.76]	2.885 [73.28]	-6.299 [-159.99]
EX	1.500 [38.1]	1.370 [34.8]	-15.355 [-390.02]	2.929 [74.4]	-6.299 [-159.99]
MQX1	3.500 [88.9]	3.370 [85.6]	.000 [0]	-5.871 [-149.12]	-6.299 [-159.99]
MQX2	3.500 [88.9]	3.370 [85.6]	5.902 [149.91]	-.031 [-0.79]	-6.299 [-159.99]
WQX	41.535 [1055]	35.039 [890]	.000 [0]	2.953 [75.01]	.000 [0]
XB	3.500 [88.9]	3.370 [85.6]	-9.420 [-239.27]	10.876 [276.25]	-5.118 [-130]

C

D1 PIPING INTERFACE
PER SPEC. LHC-DFBX-ES-230.00 REV 1.1

PIPE	PIPE OD/ID		PIPE COORDINATES AT 300 K		
DFBX	OD in [mm]	ID in [mm]	X in [mm] ±.08	Z in [mm] ±.08	Y in [mm] ±.08
V	3.06 [77.7]	2.91 [73.9]	.000 [0]	.000 [0]	13.504 [343]
CC3	.63 [16]	.53 [13.5]	-6.604 [-167.74]	-7.879 [-200.13]	14.843 [377.01]
WBX	29.53 [750.1]	23.50 [596.9]	.000 [0]	-3.528 [-89.61]	.000 [0]

△15

THIRD ANGLE PROJECTION

ERNEST ORLANDO LAWRENCE
BERKELEY NATIONAL LABORATORY
UNIVERSITY OF CALIFORNIA - BERKELEY

LHC IR FEEDBOX
MAJOR ASSEMBLY
DFBXB (IP1, RIGHT) FEED BOX ASSY

MICROFILMED:	DWG. TYPE	SHOWN ON	SCALE: 1/100	DO NOT SCALE PRINTS
	ASSEM	-	SHEET 8 OF 11	
PATENT CLEAR:	DESIGN ACCT. NO.	CATEGORY CODE	DWG. NO.	SIZE / REV.
	Z5LCE2	LH2001	24C3506	C

DWG. NO. 24C3506 SHEET NO. 8

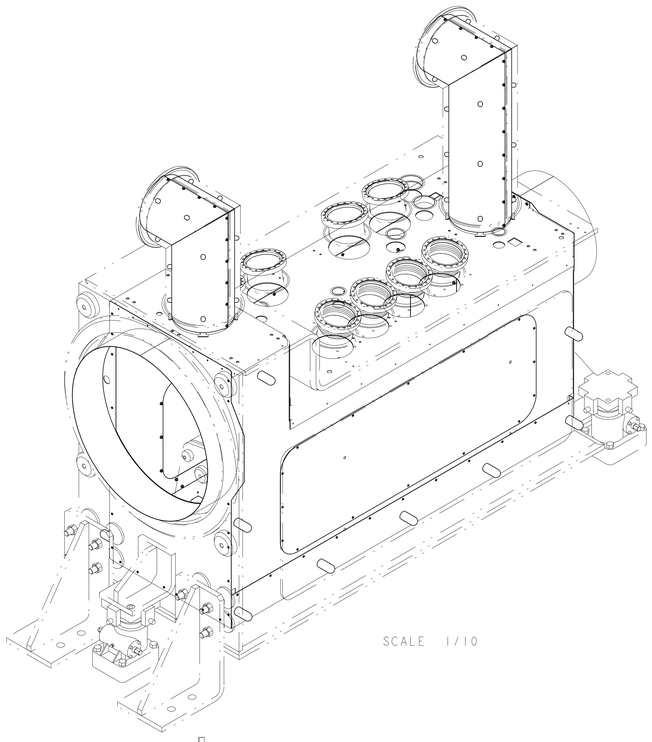

SCALE 1/10

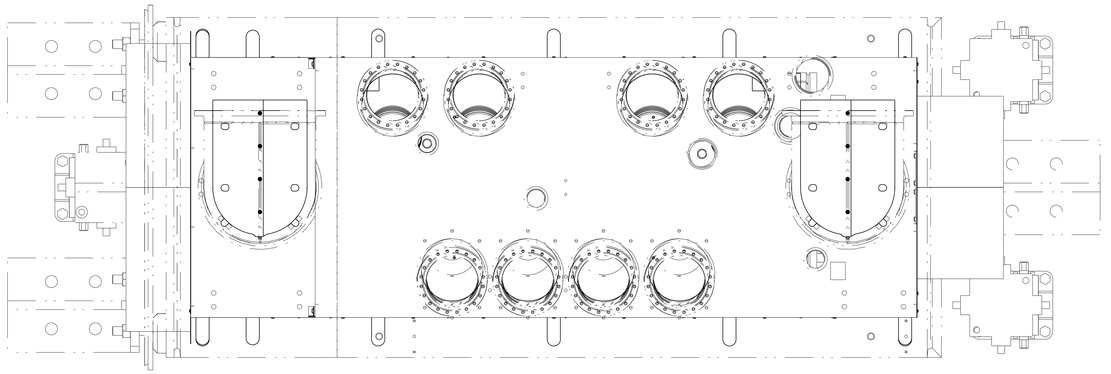

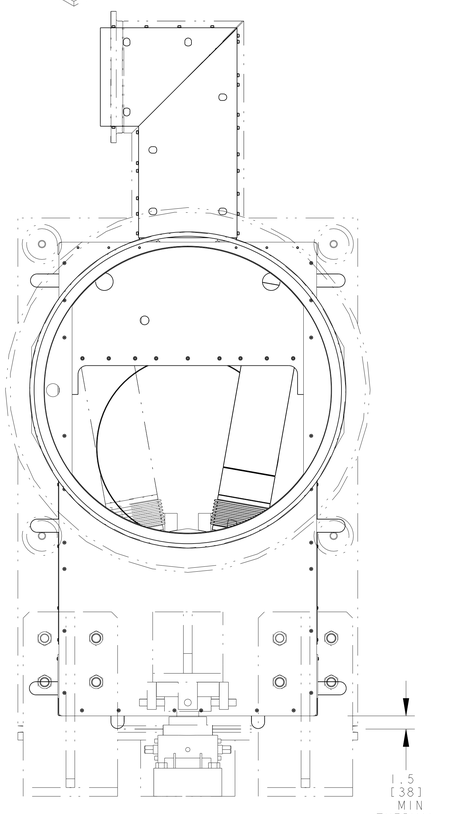

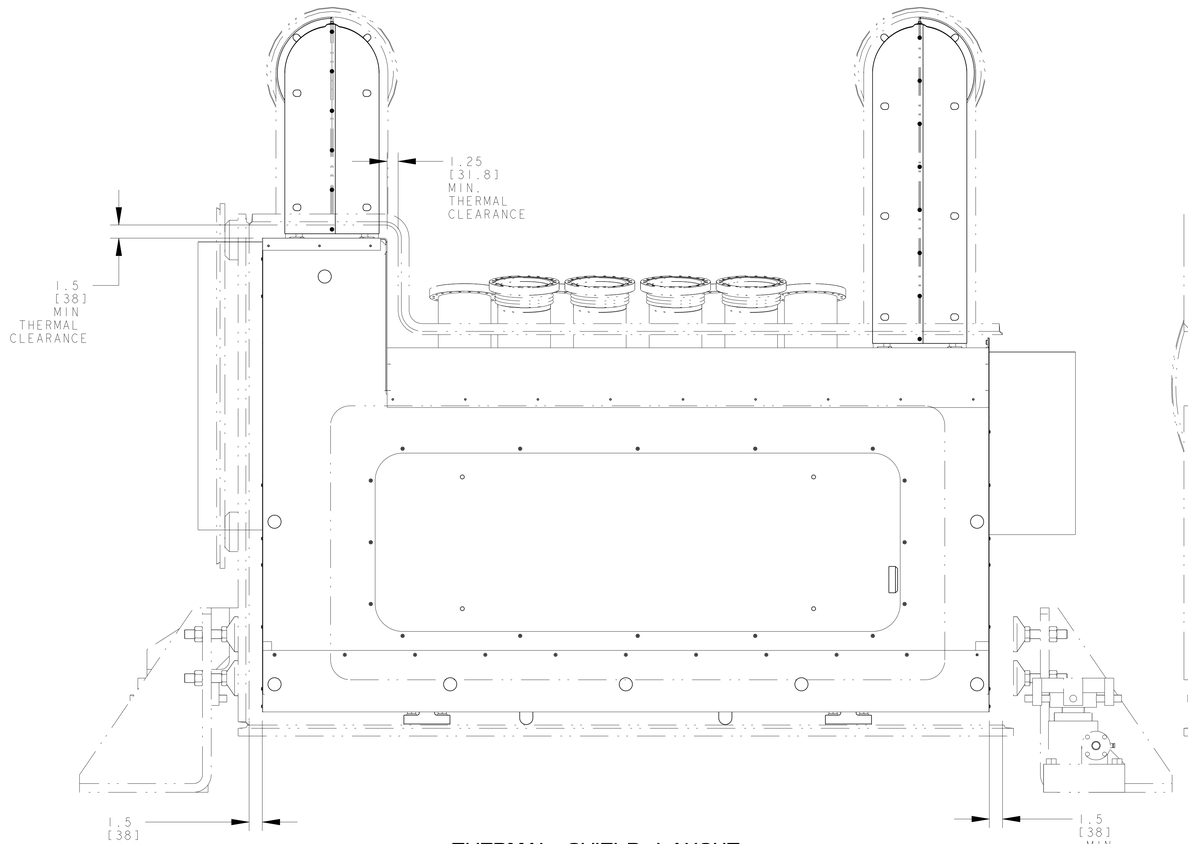

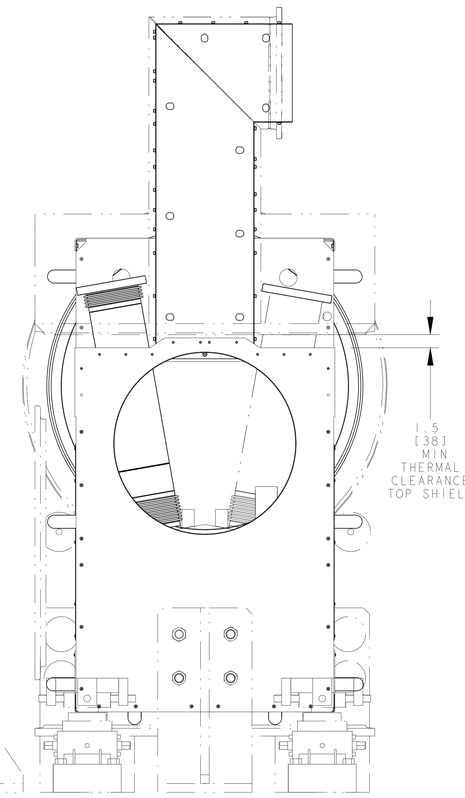

THERMAL SHIELD LAYOUT
COMPONENTS REMOVED FOR CLARITY
SCALE 3/20

THIRD ANGLE PROJECTION

ERNEST ORLANDO LAWRENCE
BERKELEY NATIONAL LABORATORY
UNIVERSITY OF CALIFORNIA - BERKELEY

LHC IR FEEDBOX
MAJOR ASSEMBLY
DFBXB (IP1, RIGHT) FEED BOX ASSY

MICROFILMED:	DWG. TYPE	SHOWN ON	SCALE: 1/3 1/10	DO NOT SCALE PRINTS
	ASSEM	-	SHEET 9 OF 11	
PATENT CLEAR:	DESIGN ACCT. NO.	CATEGORY CODE	DWG. NO.	SIZE / REV.
	Z5LCE2	LH2001	24C3506	C

DWG. NO. 24C3506 SHEET NO. 9

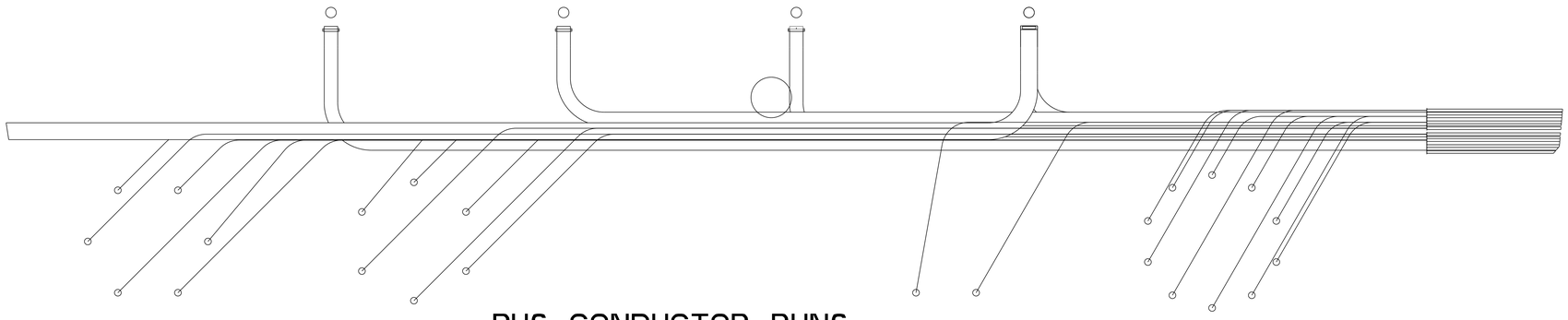

BUS CONDUCTOR RUNS

DETAIL N
SCALE 1/2

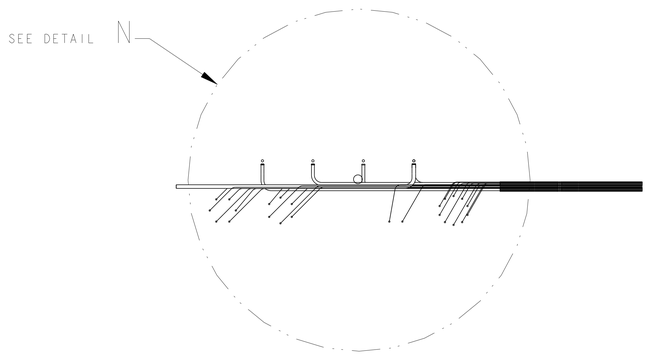

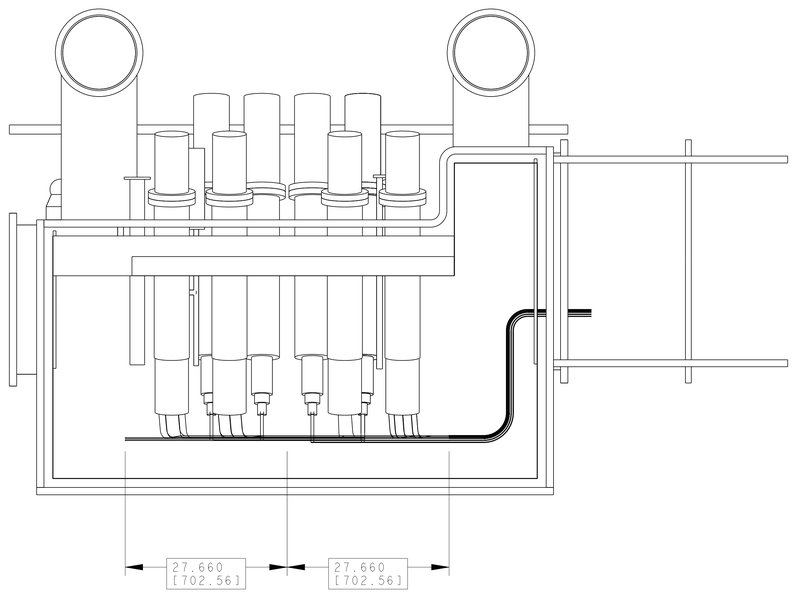

SCALE 1/10

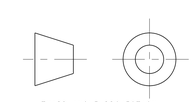

THIRD ANGLE PROJECTION

ERNEST ORLANDO LAWRENCE
BERKELEY NATIONAL LABORATORY
UNIVERSITY OF CALIFORNIA - BERKELEY

LHC IR FEEDBOX
MAJOR ASSEMBLY
DFBXB (IP1, RIGHT) FEED BOX ASSY

MICROFILMED:	DWG. TYPE	SHOWN ON	SCALE: 13/100	DO NOT SCALE PRINTS
	ASSEM	-	SHEET 10 OF 11	
PATENT CLEAR:	DESIGN ACCT. NO.	CATEGORY CODE	DWG. NO.	SIZE / REV.
	Z5LCE2	LH2001	24C3506	C

DWG. NO. 24C3506 SIZE C REV. 10

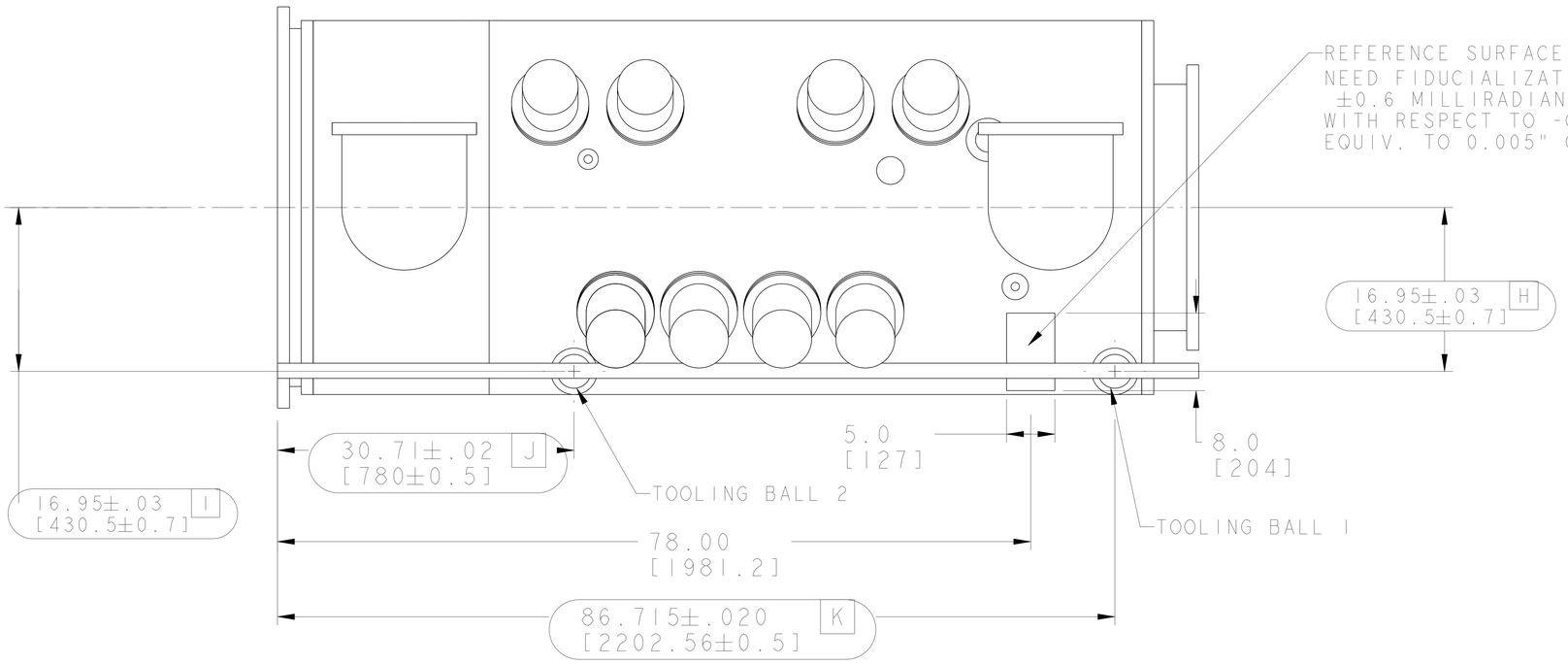

SCALE 17/100

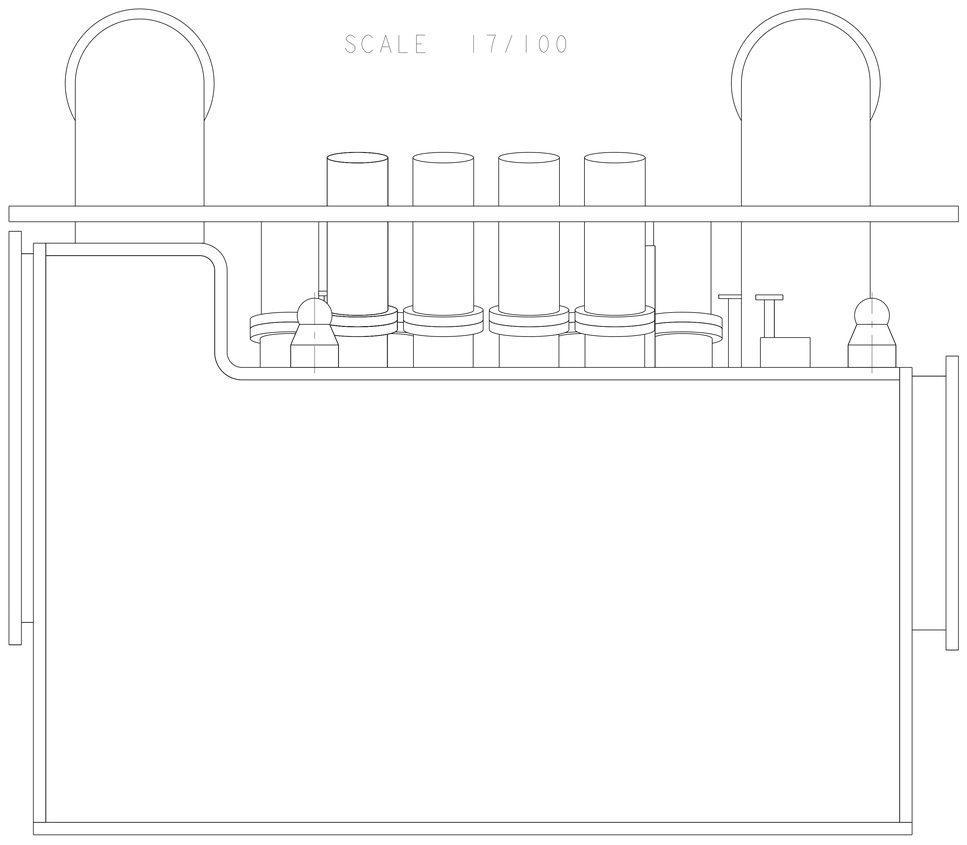

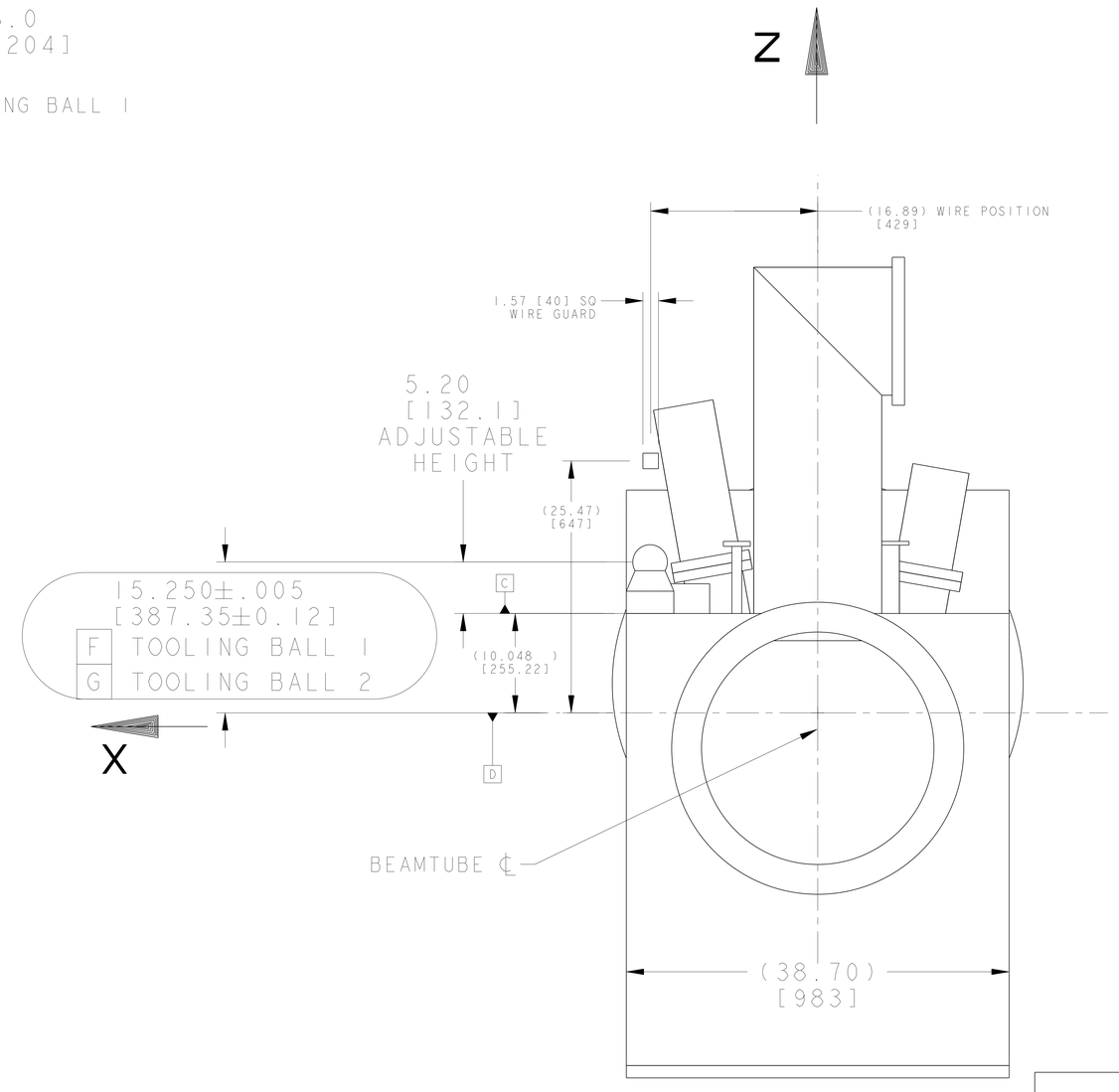

FIDUCIAL LAYOUT INFORMATION

THIRD ANGLE PROJECTION

ERNEST ORLANDO LAWRENCE
BERKELEY NATIONAL LABORATORY
UNIVERSITY OF CALIFORNIA · BERKELEY

LHC IR FEEDBOX
MAJOR ASSEMBLY
DFBXB (IP1, RIGHT) FEED BOX ASSY

MICROFILMED:	DWG. TYPE:	SHOWN ON:	SCALE: 13/100	DO NOT SCALE PRINTS
	ASSEM	-	SHEET 11 OF 11	
PATENT CLEAR:	DESIGN ACCT. NO.	CATEGORY CODE	DWG. NO.	SIZE / REV.
	Z5LCE2	LH2001	24C3506	C

DWG. NO. 24C3506 SHEET REV. C 11