DWG. NO.	SIZE	REV.	SH.
24C3224	B	1	

NOTES: (UNLESS OTHERWISE SPECIFIED)

1. ALL DIMENSIONS ARE IN INCHES [MILLIMETERS].
2. ITEM 6 SEALED WITH EPOXY WHEN MATED WITH ITEM 8.
3. VOLTAGE TAP WIRES PER SPEC 3.12.2

ITEM	PART NO	REQD	DESCRIPTION	MATERIAL
10	25M807	1	HEATER WIRE TRAY (SEE SHEET 3)	-
9	25M806	1	THERMAL SENSOR WIRE TRAY (SEE SHEET 4)	-
8	251482	1	STANDARD 8" CONFLAT FLANGE, VAPOR COOLED LEAD CLUSTER	-
7	251481	1	BAFFLE, 120 AMP VC LEAD	-
6	251480	10	INSULATOR ASSEMBLY	-
5	251479	10	120 AMP LEAD ASSEMBLY (SEE SHEET 2)	-
4	251475	1	INSTRUMENTATION MAST ASSY, 120AMP LEAD CLUSTER ASSY	-
3	24C325	1	THERMAL BAFFLE	Nema G-10
2	-	3	HEX NUT, .75-16 UNF	
1	-	3	FLAT WASHER, .75 ID	CRES

BOM FOR SHEET 1 ONLY

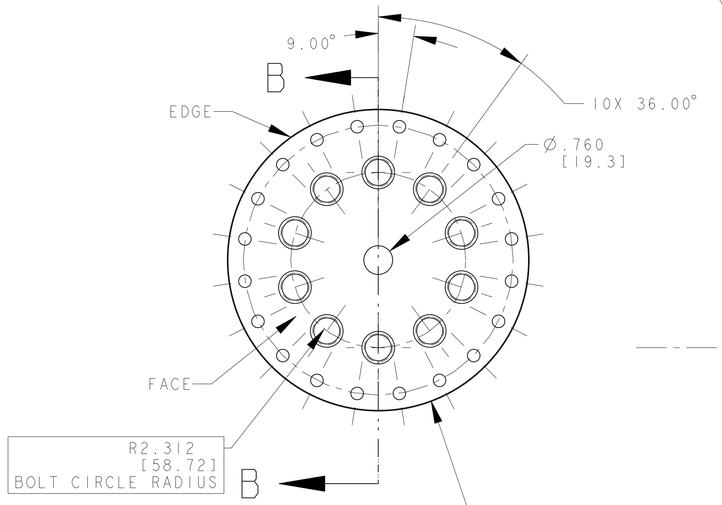

STAMP FLANGE ACCORDING TO SPECIFICATION 3.16.5, "MARKING"

ITEM 8, STANDARD 8" CONFLAT FLANGE

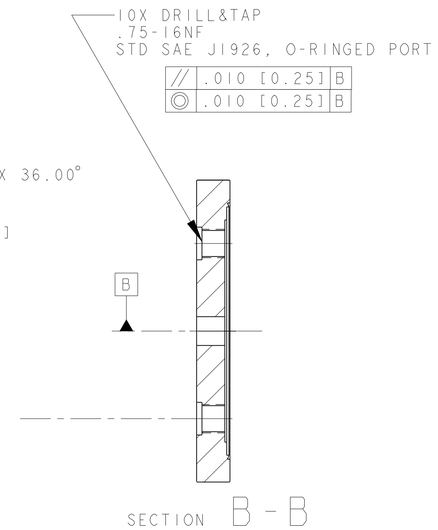

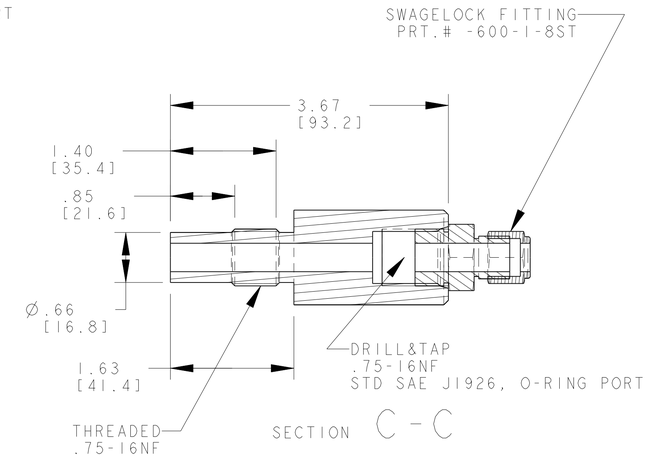

ITEM 6, INSULATOR ASSEMBLY

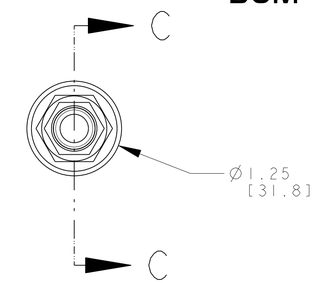

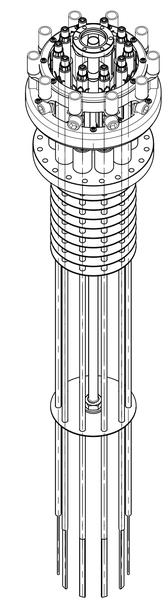

SCALE 1/5

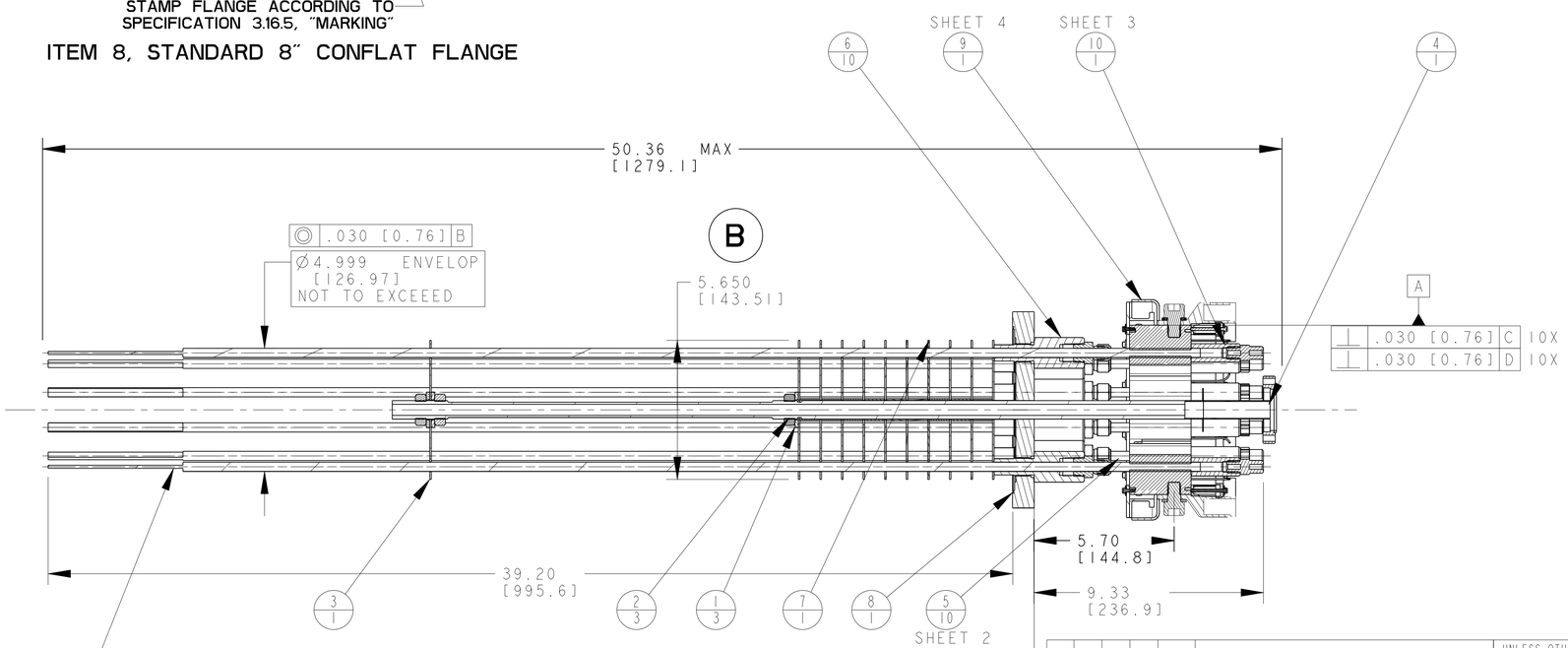

SPEC CONTROL DRAWING
8/20/02

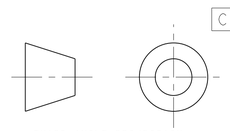

THIRD ANGLE PROJECTION

REV	DWG	CHK	ZONE	DATE	CHANGES
B	SB	JZ		10/29/02	Added Dimension "B"
A	SB	JZ		10/03/02	INITIAL RELEASE

UNLESS OTHERWISE SPECIFIED

TOLERANCES: X.X ± 0.1 | FRAC. ± 1/64 | X.XX ± 0.03 | Angles ± 1.00° | X.XXX ± 0.010 | FINISH 125 √(μin)

DO NOT SCALE PRINT

THREADS ARE CLASS 2
CHAMFER ENDS OF ALL SCREW TREADS 30°
CUT ROUND, 1.5 THREAD RELIEF ON MACHINED THREADS
BREAK EDGES .016 MAX. ON MACHINED WORK
REMOVE BURRS, WELD SPLATTER & LOOSE SCALE
IN ACCORDANCE WITH ASME Y14.5M & B46.1

SHOP ORDERS

ACCT NO.	NO. REQD y	SER NO.	-
DEL TO		DATE ISSD	-
SURFACE TREATMT	-	DATE REQD	-
IDENT METHOD	TAG		
PROJECT NUMBER	N/A		
PROJECT NAME	N/A		
DWG BY	KNOLLS	DATE	18-JUL-02
CHK BY	Jon Zbasnik	DATE	10-OCT-02
APR BY	Jon Zbasnik	DATE	02-OCT-02

ERNEST ORLANDO LAWRENCE BERKELEY NATIONAL LABORATORY
UNIVERSITY OF CALIFORNIA - BERKELEY

LHC IR FEEDBOX
MAJOR ASSEMBLY
120 AMP VC LEAD MOUNTING ASSY

MICROFILMED:	DWG. TYPE	SHOWN ON	SCALE: 1:1/100	DO NOT SCALE PRINTS
	ASSEM		SHEET 1 OF 4	
PATENT CLEAR:	DESIGN ACCT. NO.	CATEGORY CODE	DWG. NO.	SIZE / REV.
	Z5LCE2	LH2001	24C3224	B

DWG. NO.	SIZE	REV.	SH.
24C3224	B	2	

NOTES FOR SHEET 2 ONLY:

1. ITEM 2 TO BE INSULATED TO PROVIDE 2 KV DC STANDOFF IN ASSEMBLY SHOWN ON 24C322, SHEET 1
2. ITEM 5 TO BE PLATED PER SPECIFICATION 3.13.3

ITEM	PART NO	REQD	DESCRIPTION	MATERIAL
9	251454	1	THREADED CONNECTOR	Nema G10
8	251453	1	LUG TERMINAL	OFHC Copper
7	-	2	WATLOW HEATER (.250D) E2A72DP24	
6	-	1	MSCS 1308	
5	-	1	MPW	
4	-	1	MINCO THERMAL SENSOR, PT 100 S100722	-
3	-	1	3/8 " Diameter Current Lead Element	-
2	-	1	1/4 VCR MALE CON. SS-4-VCR-1-4	-
1	-	1	120 Amp Terminal	-

BOM FOR SHEET 2 ONLY

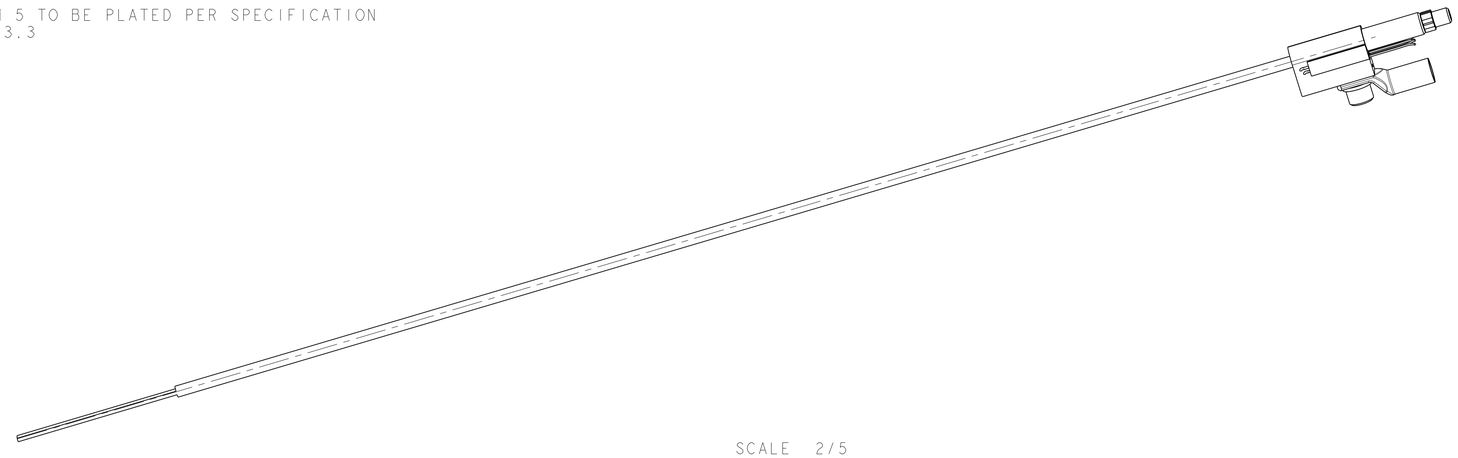

SCALE 2/5

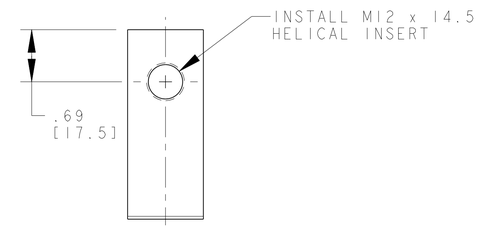

ITEM 5, LUG TERMINAL

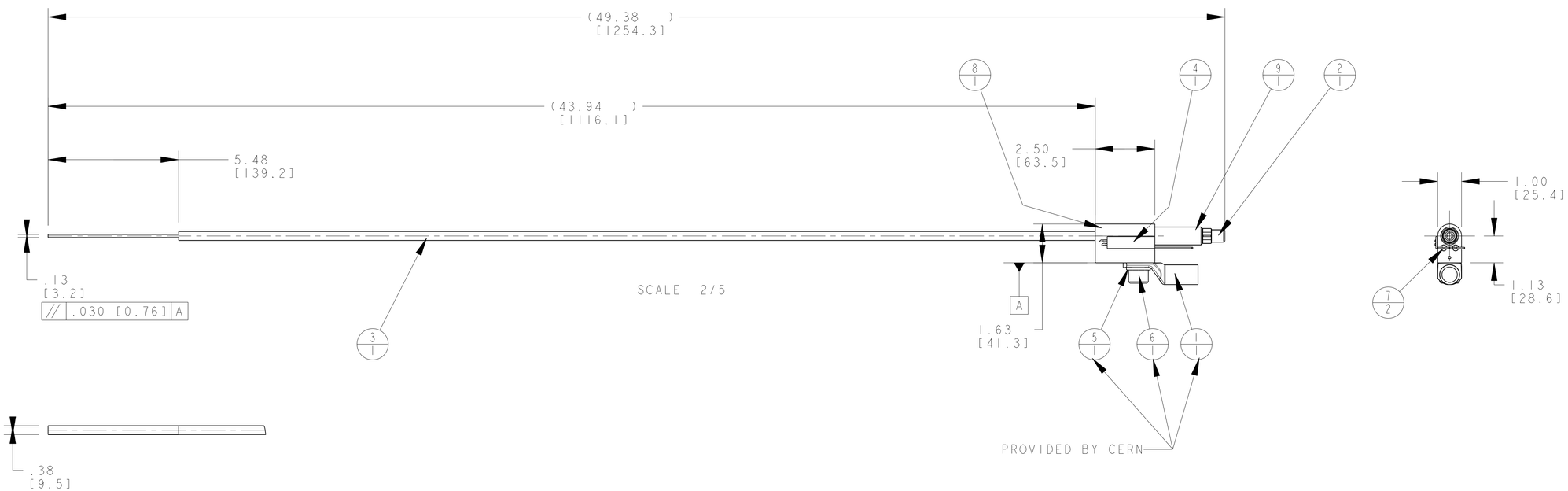

SPEC CONTROL DRAWING
8/20/02

120 AMP LEAD ASSEMBLY

THIRD ANGLE PROJECTION

ERNEST ORLANDO LAWRENCE
BERKELEY NATIONAL LABORATORY
UNIVERSITY OF CALIFORNIA - BERKELEY

LHC IR FEEDBOX
MAJOR ASSEMBLY
120 AMP VC LEAD MOUNTING ASSY

MICROFILMED:	DWG. TYPE	SHOWN ON	SCALE: 11/100	DO NOT SCALE PRINTS
	ASSEM		SHEET 2 OF 4	
PATENT CLEAR:	DESIGN ACCT. NO.	CATEGORY CODE	DWG. NO.	SIZE / REV.
	Z5LCE2	LH2001	24C3224	B

DWG. NO.	SIZE	REV.	SH.
24C3224	B	3	

HEATER WIRE TRAY

ITEM	PART NO	REQD	DESCRIPTION	MATERIAL
4	251476	1	HEATER WIRE SUPPORT RING, 120	UHMW-PE
3	251475	1	HEATER WIRE SUPPORT RING COVER	UHMW-PE
2	-	10	M3X0.5 x 35.0 SOCKET HD CAP SCREW	
1	-	10	FLAT WASHER, M3	CRES

BOM FOR SHEET 3 ONLY

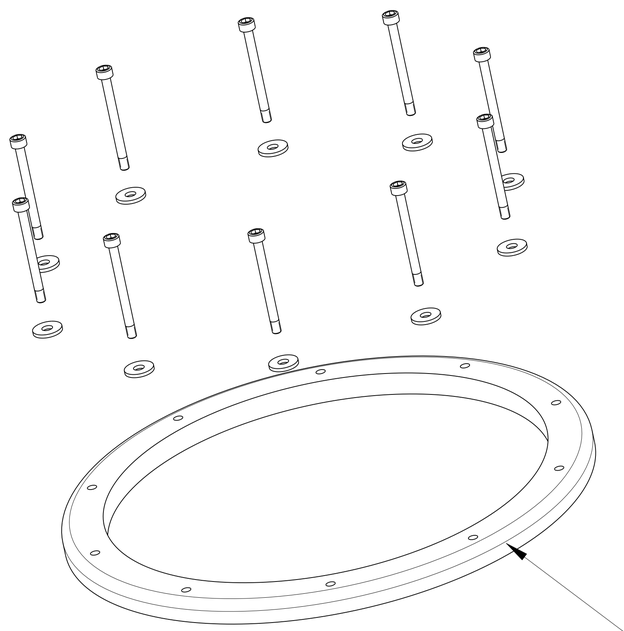

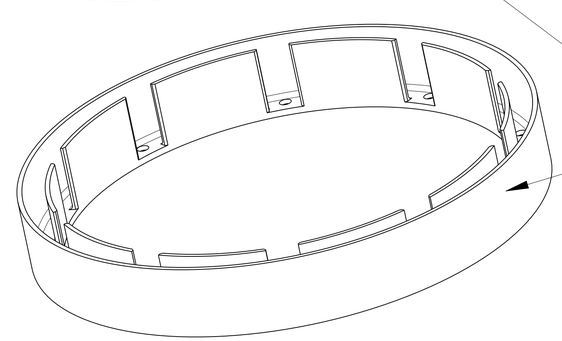

UHMW-PE
0.090 INCHES THICK

SCALE 1/1

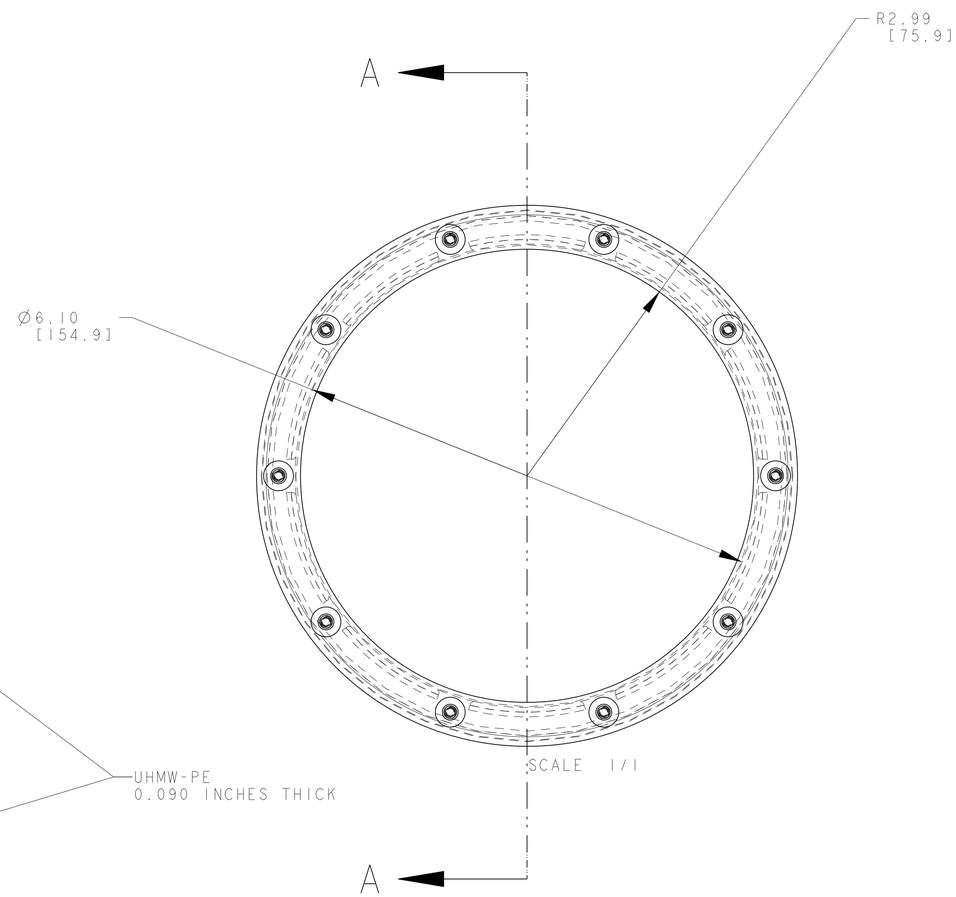

SCALE 1/1

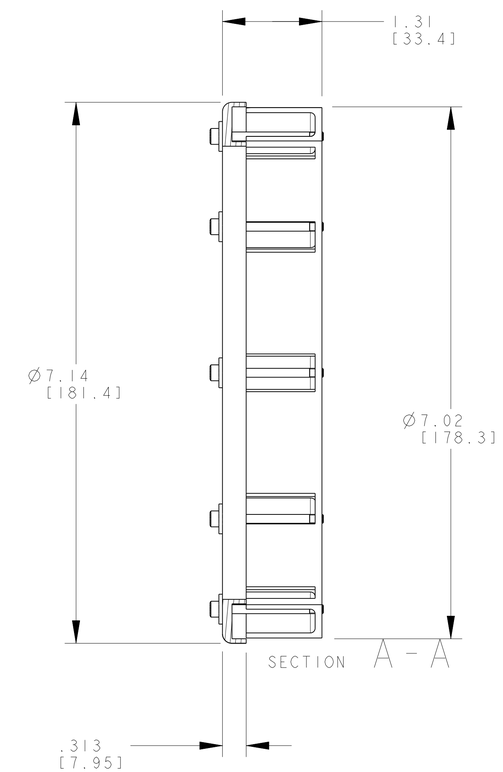

SECTION A - A

WIRE HOLE OUTLET TO BE DETERMINED AT FINAL ASSEMBLY OF 24C322 (SHEET 1)

SPEC CONTROL DRAWING
8/20/02

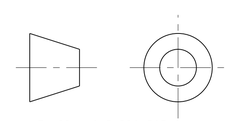

THIRD ANGLE PROJECTION

ERNEST ORLANDO LAWRENCE
BERKELEY NATIONAL LABORATORY
UNIVERSITY OF CALIFORNIA - BERKELEY

LHC IR FEEDBOX
MAJOR ASSEMBLY
120 AMP VC LEAD MOUNTING ASSY

MICROFILMED:	DWG. TYPE	SHOWN ON	SCALE: 11/100	DO NOT SCALE PRINTS
	ASSEM		SHEET 3 OF 4	
PATENT CLEAR:	DESIGN ACCT. NO.	CATEGORY CODE	DWG. NO.	SIZE / REV.
	Z5LCE2	LH2001	24C3224	B

DWG. NO.	SIZE	REV.	SH.
24C3224	B	4	

THERMAL SENSOR TRAY

ITEM	PART NO	REQD	DESCRIPTION	MATERIAL
6	251478	1	COVER, LOWER WIRE TRAY	UHMW-PE
5	251477	1	HEATER WIRE SUPPORT RING	UHMW-PE
4	251473	1	MOUNTING RING	NEMA G-10
3	-	5	M3X0.5 x 5.0, FLUSH HEAD/INTERNAL WRENCHING	
2	-	15	M3X0.5 x 10.0 SOCKET HD CAP SCREW	
1	-	15	FLAT WASHER, M3	CRES

BOM FOR SHEET 4 ONLY

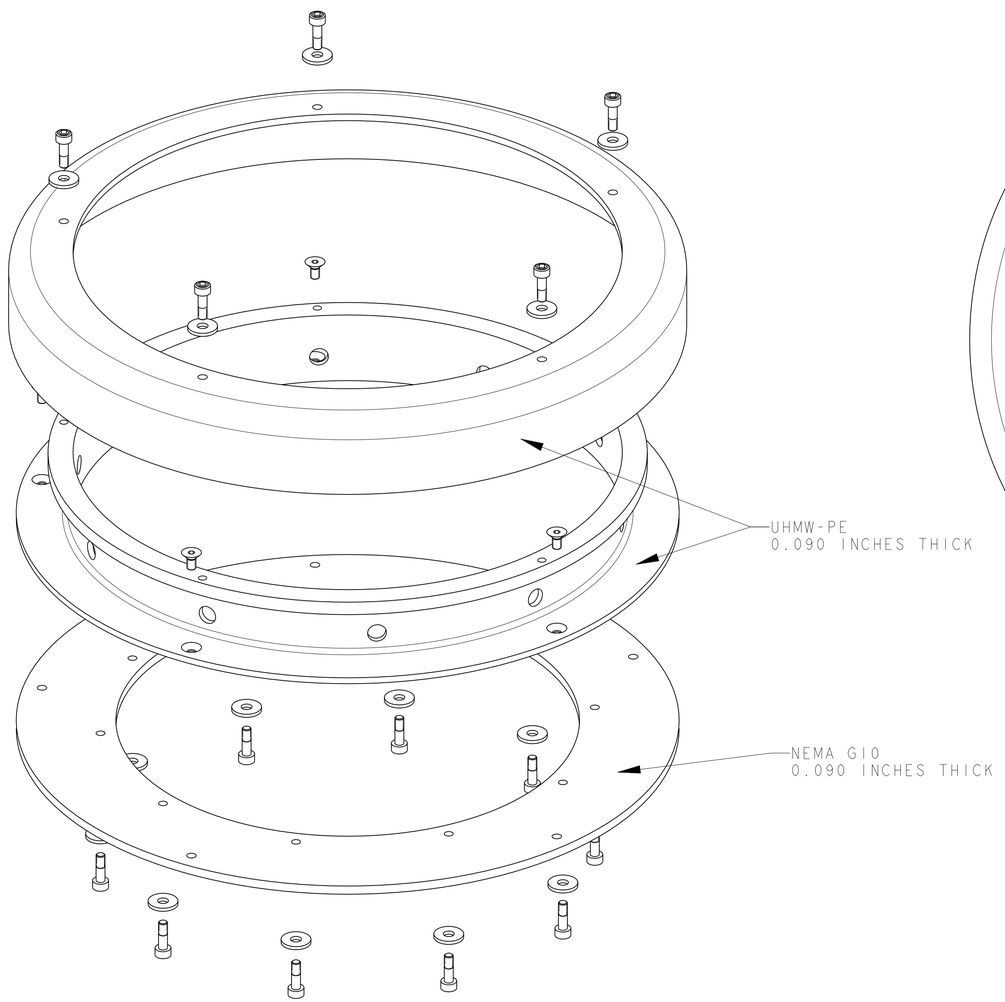

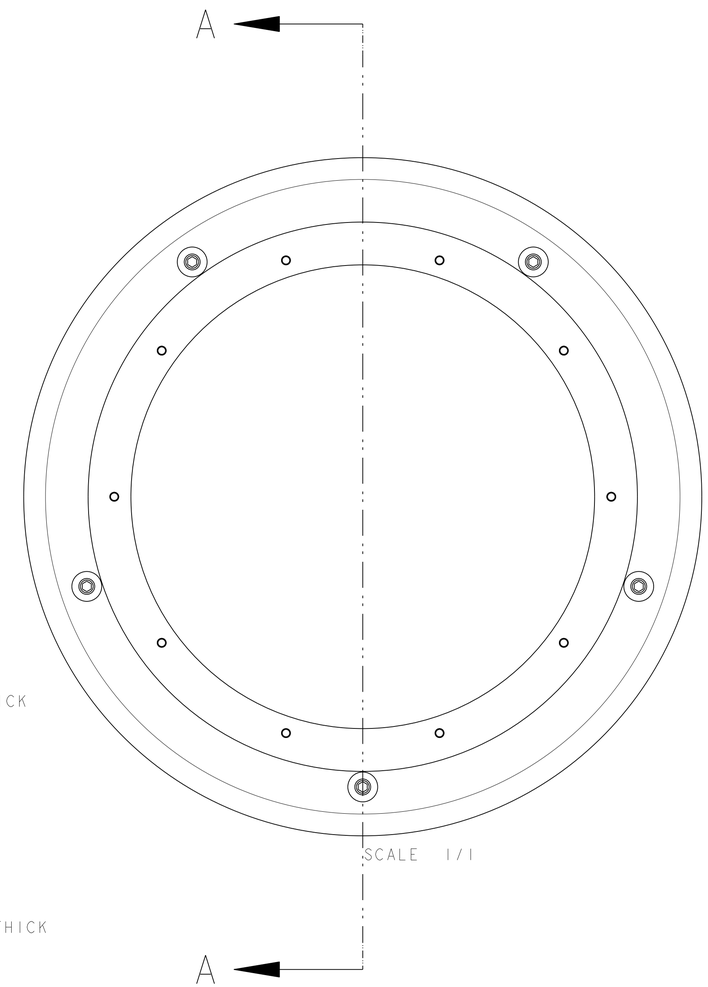

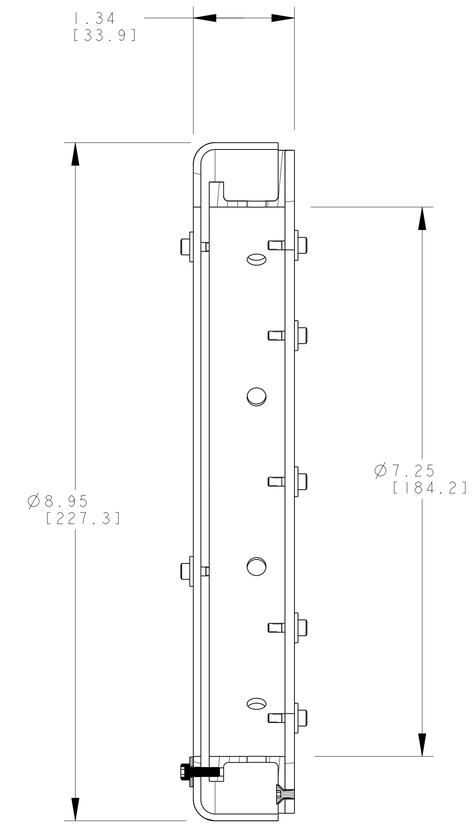

SECTION A - A

SPEC CONTROL DRAWING
8/20/02

WIRE OUTLET HOLES TO BE DETERMINED AT THE FINAL ASSEMBLY OF 24C322 (SHEET 1)

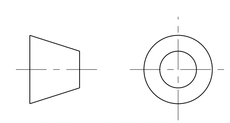

THIRD ANGLE PROJECTION

ERNEST ORLANDO LAWRENCE
BERKELEY NATIONAL LABORATORY
UNIVERSITY OF CALIFORNIA - BERKELEY

LHC IR FEEDBOX
MAJOR ASSEMBLY
120 AMP VC LEAD MOUNTING ASSY

MICROFILMED:	DWG. TYPE	SHOWN ON	SCALE: 11/100	DO NOT SCALE PRINTS
	ASSEM		SHEET 4 OF 4	
PATENT CLEAR:	DESIGN ACCT. NO.	CATEGORY CODE	DWG. NO.	SIZE / REV.
	Z5LCE2	LH2001	24C3224	B