ITEM	QTY	DESCRIPTION	MAT'L
1	2	1" X 4" BAR X 48"LG	A-36
2	4	1/2" PL x 3" x 6" LG	ALUM
3	2	1/2" PL x 1.5" x 4" LG	ALUM
4	12	1/4" x 1.5"OD x .302" ID	ALUM
5	12	1/4" FLAT WASHER	SS
6	12	1/4-20UNC x 1" LG HEX HEAD CAP SCREW	SS

NOTES:
1. QUANTITIES ARE FOR 1 SHIPPING FRAME, FOUR FRAMES REQUIRED.
2. MACHINE SHIM THICKNESSES AT ASSEMBLY TO ENSURE THAT THE CROSS BARS FIT SNUGLY AGAINST THE FEEDBOX.

MAT'L. ORDERED
11/18/04
DJC
RDL

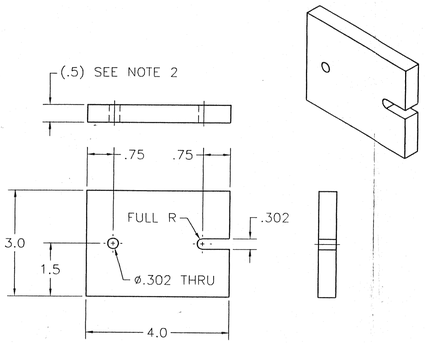

ITEM 2 – SIDE SHIM

QTY 4 PER FRAME
SEE NOTE 2

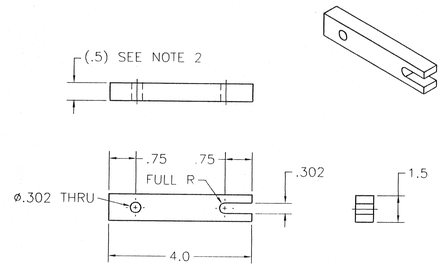

ITEM 3 – TOP SHIM

QTY 2 PER FRAME
SEE NOTE 2

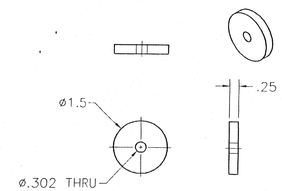

ITEM 4 – WASHER

QTY 12 PER FRAME

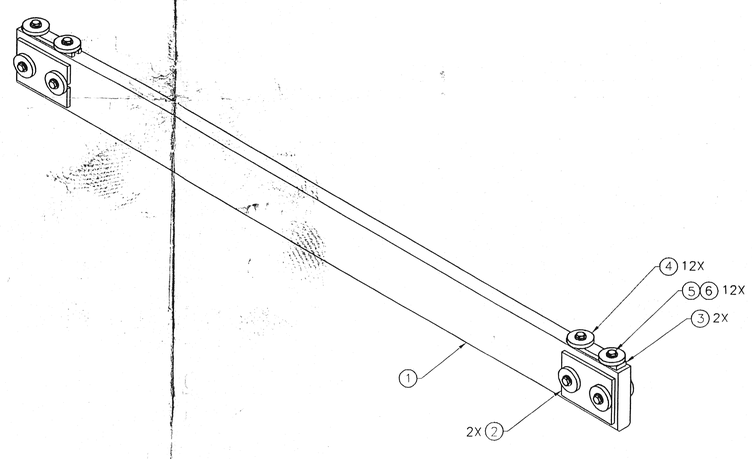

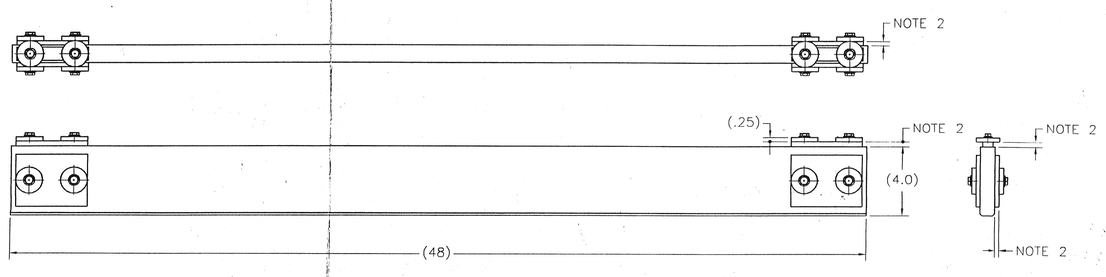

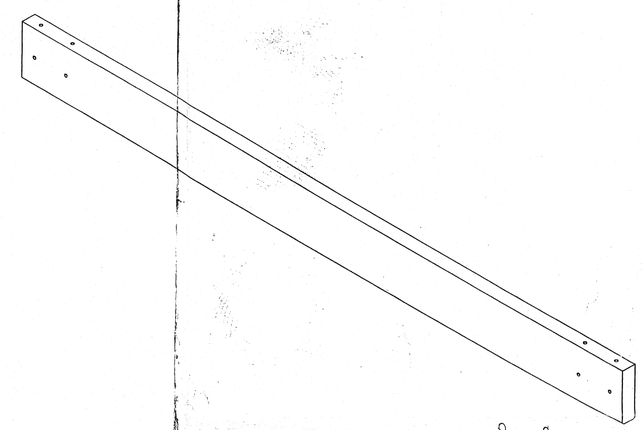

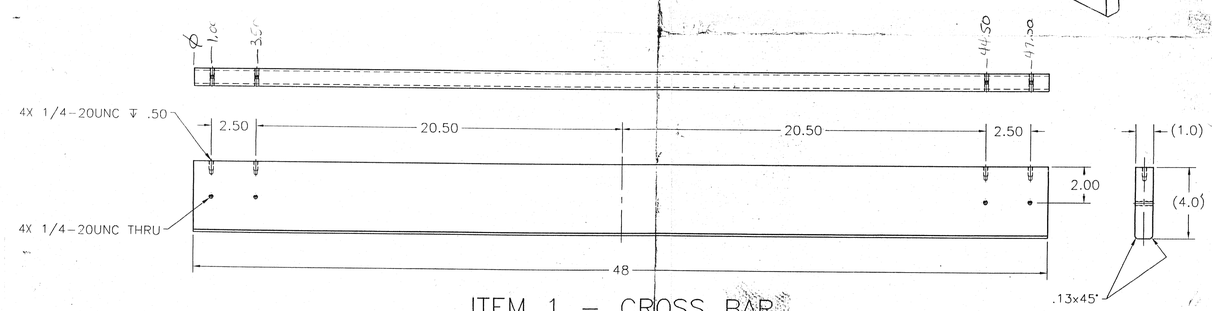

ITEM 1 – CROSS BAR

QTY 2 PER FRAME

*00918 -0065- * Gm

REV.	DESCRIPTION	BY	CHK'D
UNLESS NOTED OTHERWISE DIMENSIONS IN INCHES	MTM Meyer Tool & Mfg., Inc.		
TOLERANCES			
FRACT. ± 1/16 .X± .03 .XX± .01 .XXX± .005 ANGLES± 1Deg	BY: RDL 11/10/04	CHK'D: RDL 11/11/04	
	SHIPPING FRAME HOLD DOWN BAR ASSEMBLY		
SCALE 1:4	CUSTOMER LBNL	JOB NO. 00918 -0065	DWG. 21
SIZE: D	REV. 0		

THIS DRAWING AND DESIGN IS THE PROPERTY OF MEYER TOOL AND MFG. CO. UNAUTHORIZED USE OR REPRODUCTION IS STRICTLY PROHIBITED.