ITEM	QTY	DESCRIPTION	MAT'L
1	4	1" X 4" BAR X 8" LG	A-36
2	4	1/2" X 4" X 8" LG	A-36
3	2	1" X 4" BAR X 18.25" LG	A-36
4	2	1" X 4" BAR X 31" LG	A-36

16 PCS
16 PCS
8 PCS
8 PCS

NOTES:
1. QUANTITIES ARE FOR 1 SHIPPING FRAME.
- FOUR FRAMES REQUIRED.

MAT'L ORDERED
11/18/04
DJC
RJN

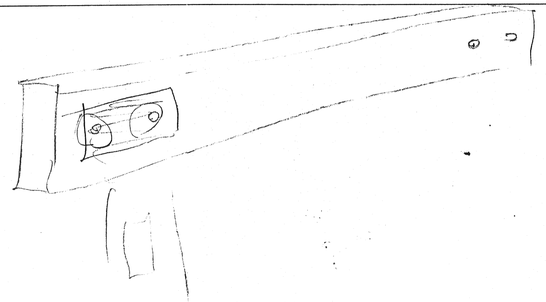

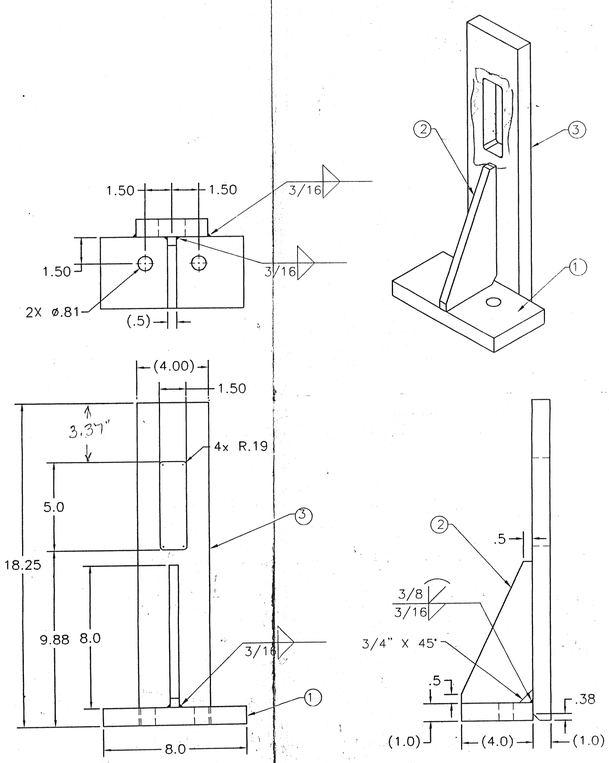

ITEM A

QTY 2

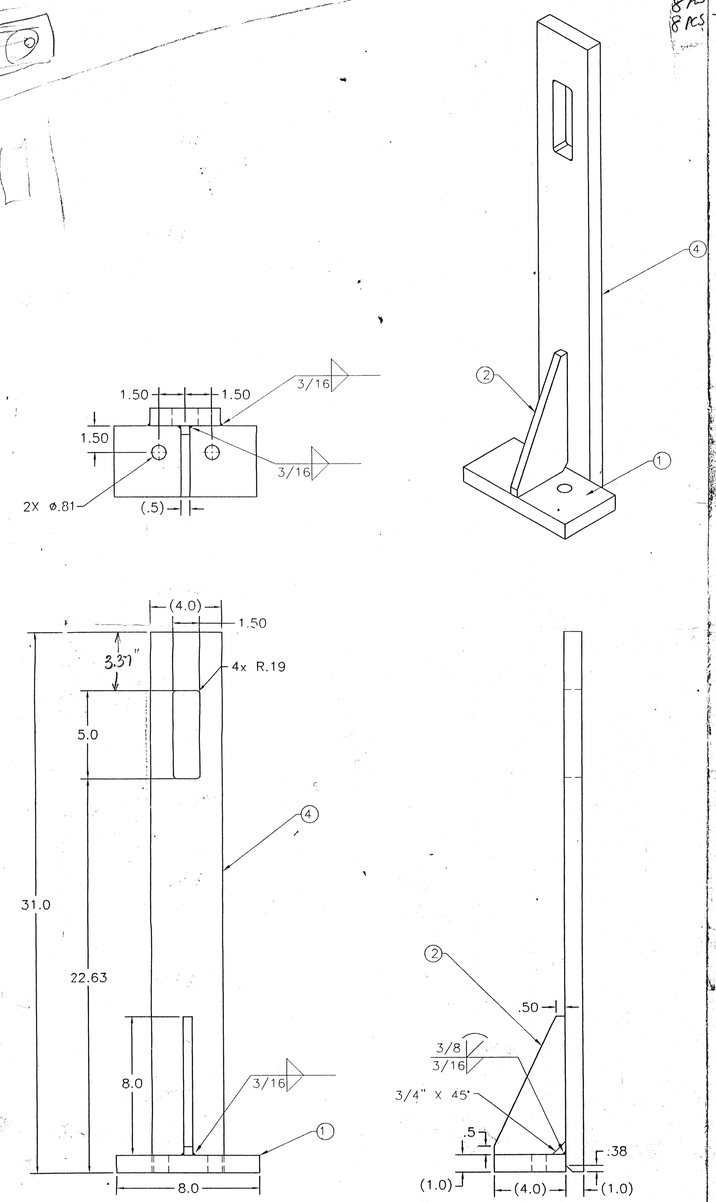

ITEM B

QTY 2

(#00918-0065 - *GM)

REV.	DESCRIPTION	BY	CHK'D
UNLESS NOTED OTHERWISE DIMENSIONS IN INCHES	MTM Meyer Tool & Mfg., Inc.		
TOLERANCES			
FRACT. ± 1/16 .X± .03 .XX± .01 .XXX± .005 ANGLES± 1Deg	BY: CME 11/10/04	CHK'D: RJN 11/18/04	
	SHIPPING FRAME HOLD DOWN BRACKETS		
SCALE 1:4	CUSTOMER LBNL	JOB NO. 00918 -0065	DWG. SIZE: D 20 REV. 0

THIS DRAWING AND DESIGN IS THE PROPERTY OF MEYER TOOL AND MFG. CO. UNAUTHORIZED USE OR REPRODUCTION IS STRICTLY PROHIBITED.