ITEM	QTY	DESCRIPTION	MAT'L
1	1	1 1/2" x 4" FLAT BAR x 9 1/2"LG	A36
2	2	1" x 4" FLAT BAR x 16"LG	A36
3	2	1" x 4" FLAT BAR x 12"LG	A36
4	1	1/4" x 2 1/2" FLAT BAR x 6"LG	A36
5	1	1/4" x 2" FLAT BAR x 6"LG	A36
6	1	1.5" OD x 1/4" THK	A36
7	4	1 1/2" x 4" FLAT BAR x 4" LG	A36

NOTE:
1. QUANTITIES ARE FOR 1 WELDMENT; 4 WELDMENTS PER FRAME, 4 FRAMES RQD.
2. USED ON DWG SF16.

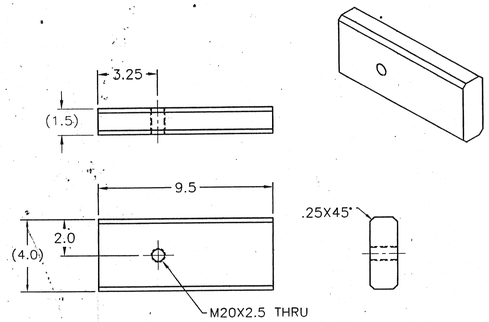

ITEM 1

QTY 1

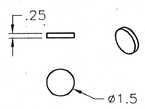

ITEM 6

QTY 1

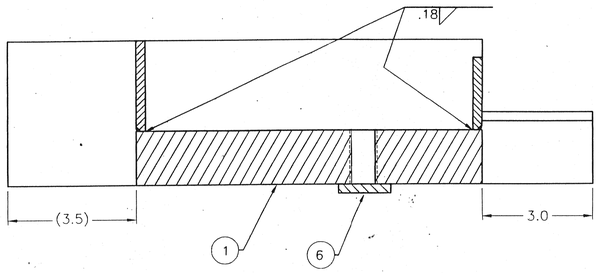

SECTION A–A

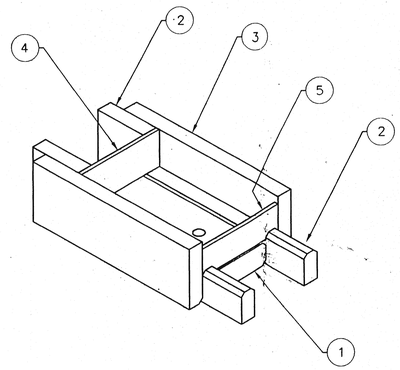

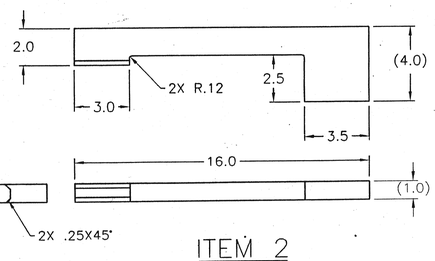

ITEM 2

QTY 2

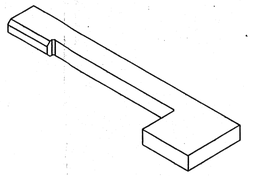

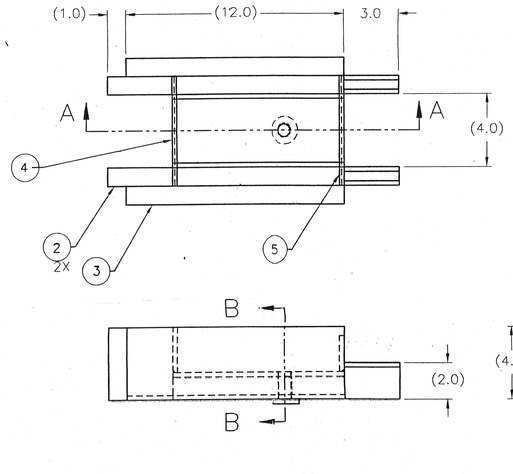

ASSEMBLY A

QTY 4 PER FRAME

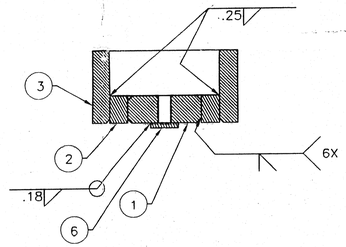

SECTION B–B

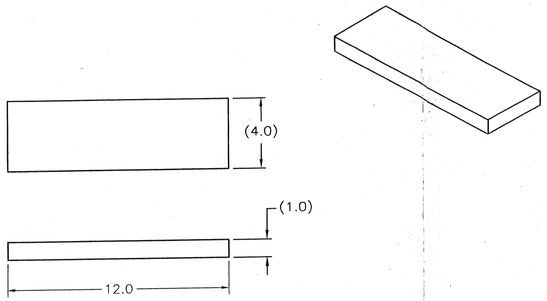

ITEM 3

QTY 2

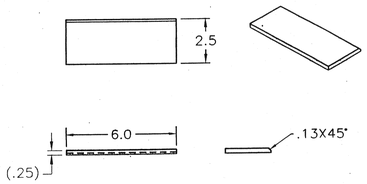

ITEM 4

QTY 1

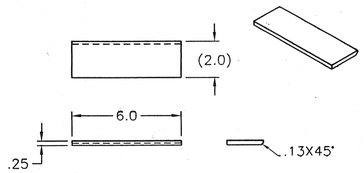

ITEM 5

QTY 1

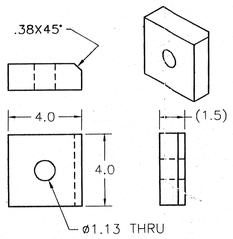

ITEM 7

QTY 4
PER FRAME

QTY=4x4=16

REV.	DESCRIPTION	BY	CHK'D

UNLESS NOTED OTHERWISE DIMENSIONS IN INCHES

TOLERANCES
FRACT. ± 1/16
.X ± .03
.XX ± .01
.XXX ± .005
ANGLES ± 1Deg

MTM
Meyer Tool & Mfg., Inc.

BY: CME 9/18/03 CHK'D: RDR 11/3/03

00918-0065 SHIPPING FRAME
HOIST BOX WELDMENT ASSY

THIS DRAWING AND DESIGN IS THE PROPERTY OF MEYER TOOL AND MFG. CO. UNAUTHORIZED USE OR REPRODUCTION IS STRICTLY PROHIBITED.

SCALE	CUSTOMER	JOB NO.	DWG.	SIZE: D
1:4	LBNL	00918-0065	-18	REV. 0