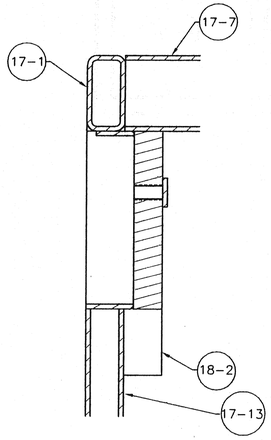

SECTION A–A
4X

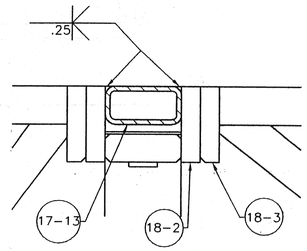

SECTION B–B
4X

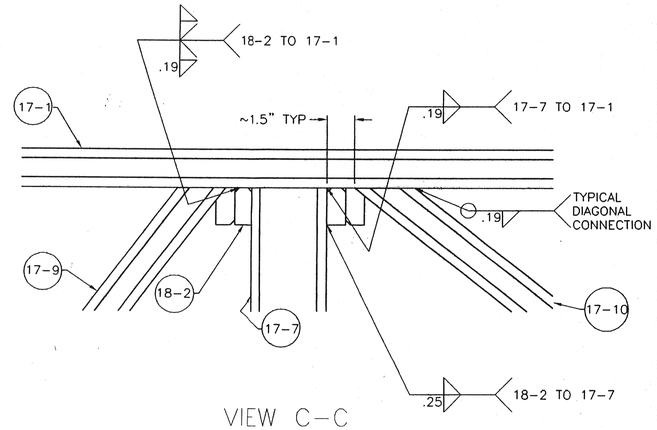

VIEW C–C
4X

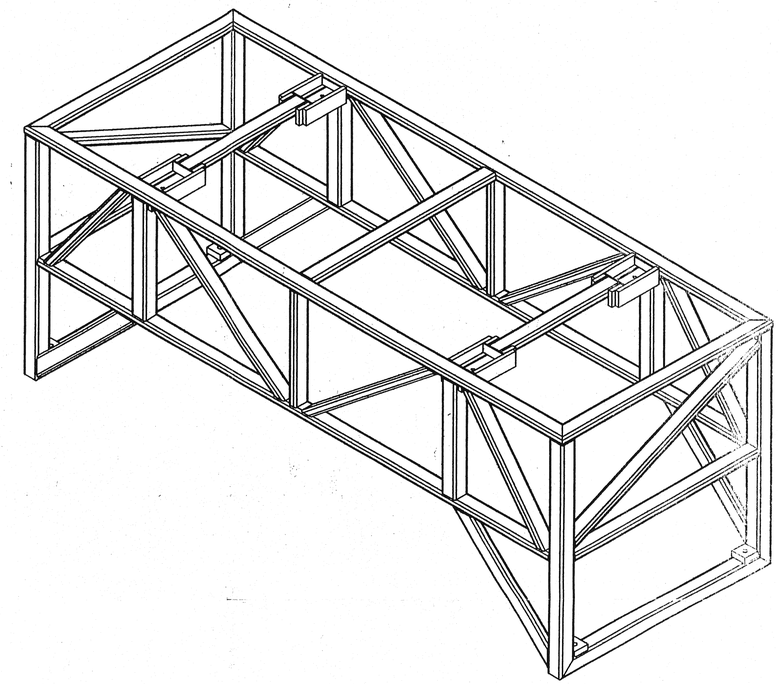

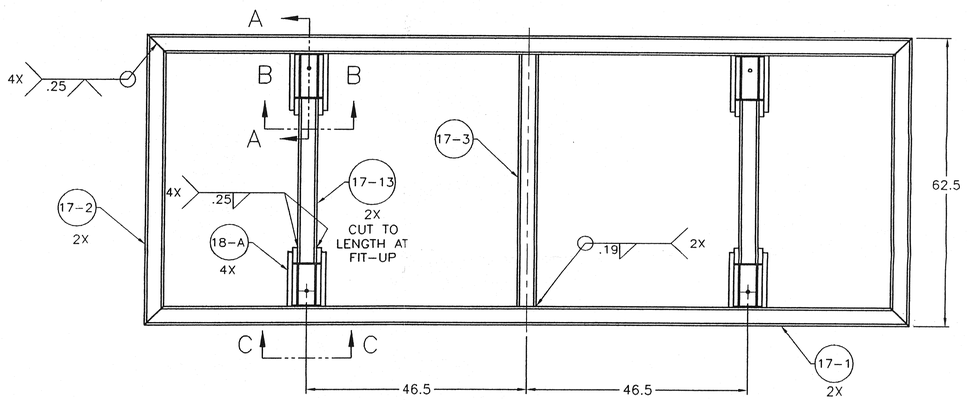

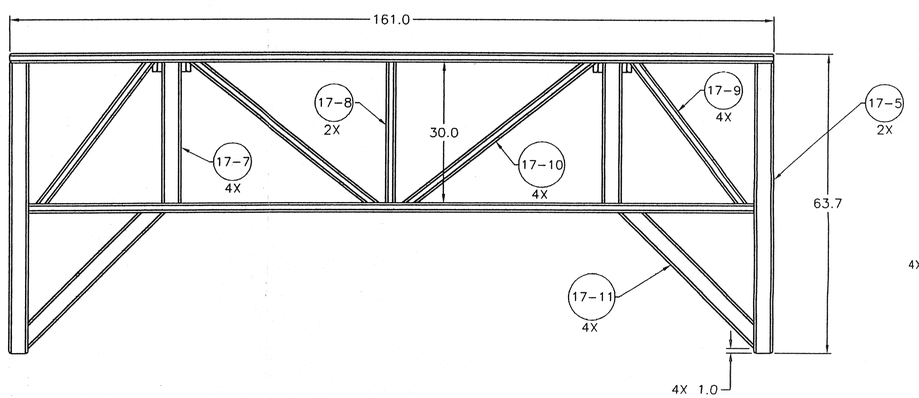

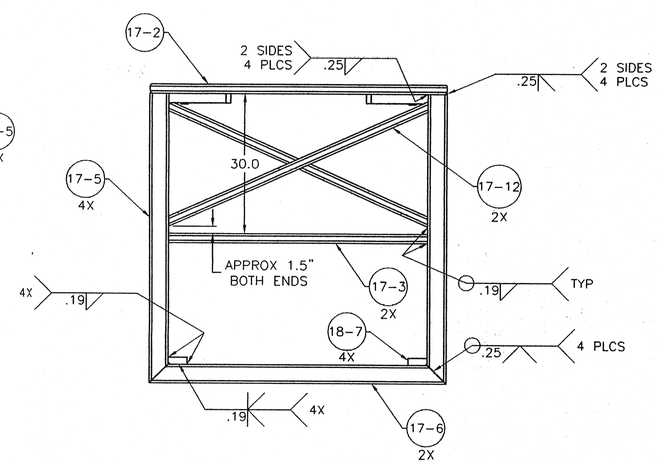

QTY=4

A	REV ITEM 17-11	RDL 7/13/04	RSL 7/13/04
REV.	DESCRIPTION	BY	CHK'D

UNLESS NOTED OTHERWISE DIMENSIONS IN INCHES
TOLERANCES
FRACT. ± 1/16
.X± .03
.XX± .01
.XXX± .005
ANGLES± 1Deg

MTM
Meyer Tool & Mfg., Inc.

BY: CME 9/18/03 CHK'D: RDL 11/6/03

00918-0065 SHIPPING FRAME
UPPER FRAME WELDMENT

SCALE 1:15 | CUSTOMER LBNL | JOB NO. 00918-0065 | DWG. SF16 | SIZE: D | REV. A

THIS DRAWING AND DESIGN IS THE PROPERTY OF MEYER TOOL AND MFG. CO. UNAUTHORIZED USE OR REPRODUCTION IS STRICTLY PROHIBITED.