ITEM	QTY	DESCRIPTION	MAT'L
1	12	WIRE ROPE VIBRATION ISOLATOR IDC # M20-390-08-A	ALUM/STEEL
2	12	1" x 6" FLAT BAR x 10.5" LG	A36
3	12	1" x 3.5" FLAT BAR x 13" LG	A36
4	96	3/8"-16UNC 1.5LG SOCKET HD CAP SCREW	CS/ZINC

NOTES:
1. QUANTITIES ARE FOR 1 FRAME, 4 FRAMES RQD. (12 ASSEMBLIES PER FRAME)

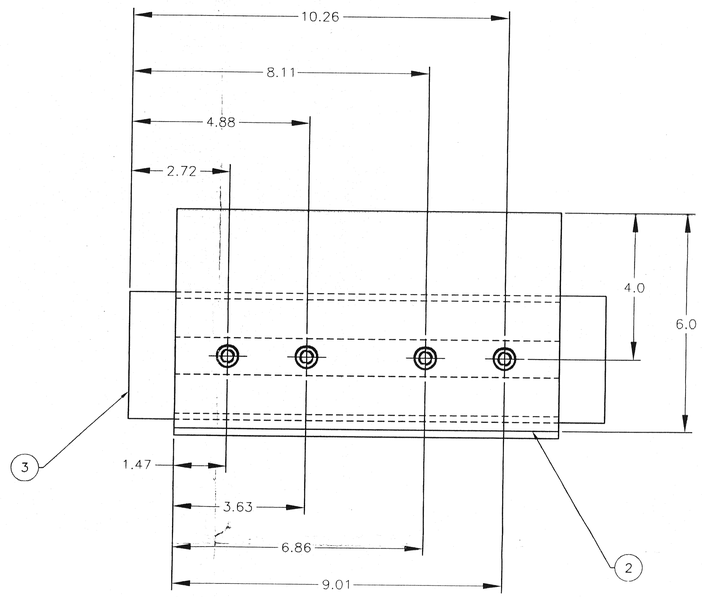

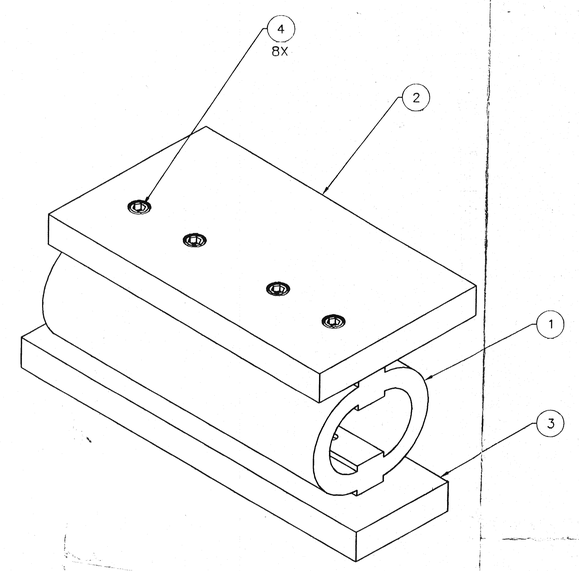

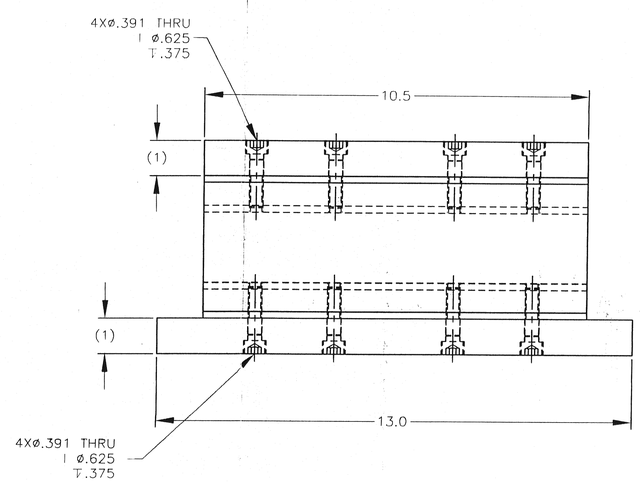

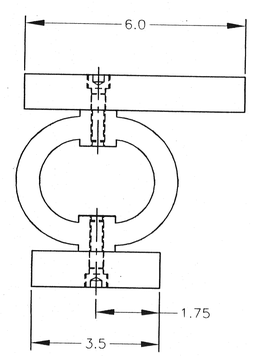

ASSY A

12 PER FRAME

QTY = 48 TOTAL

REV.	DESCRIPTION	BY	CHK'D

UNLESS NOTED OTHERWISE DIMENSIONS IN INCHES

TOLERANCES

FRACT. ± 1/16
.XX ± .03
.XXX ± .005
ANGLES ± 1Deg

MTM
Meyer Tool & Mfg., Inc.

BY: CME 08/07/03 CHK'D: RDL 11/13/03

00918-0065 SHIPPING FRAME
SADDLE VIBRATION ISOLATOR ASSY

THIS DRAWING AND DESIGN IS THE PROPERTY OF MEYER TOOL AND MFG. CO. UNAUTHORIZED USE OR REPRODUCTION IS STRICTLY PROHIBITED.

SCALE	CUSTOMER	JOB NO.	DWG.	SIZE: D
1:2	LBNL	00918-0065	SF14	REV. 0