ITEM	QTY	DESCRIPTION	MAT'L
1	2	8" x 6" x 3/8" TUBE x 148" LG	A500 GRB
2	2	C7 x 12.25" x 55.5"	A36

NOTES:
1. QUANTITIES ARE FOR 1 FRAME, 4 FRAMES ROD.

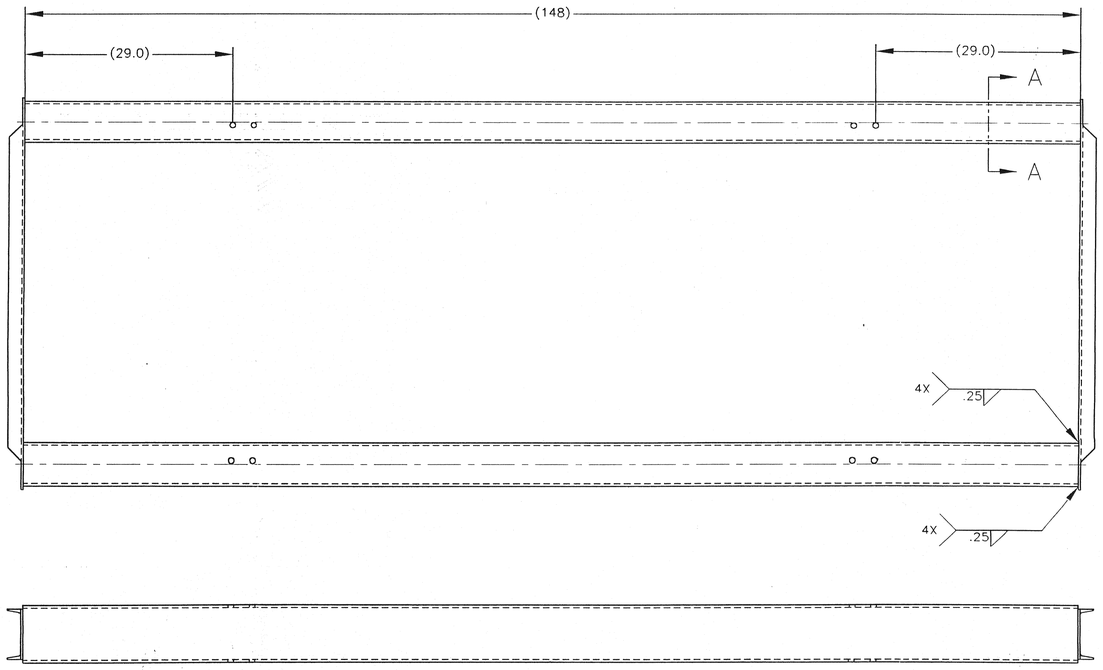

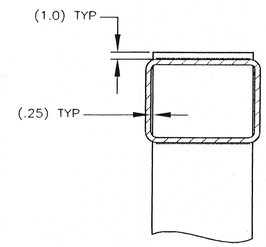

SECTION A–A
SCALE 1:5

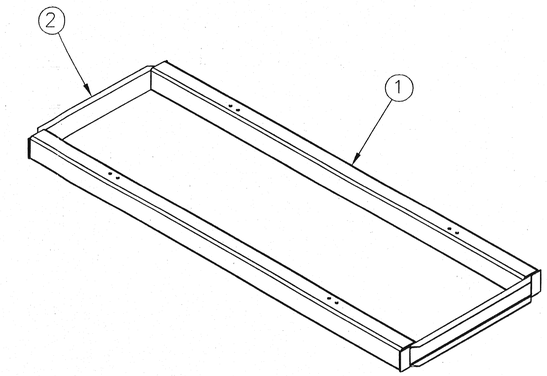

SCALE 1:20

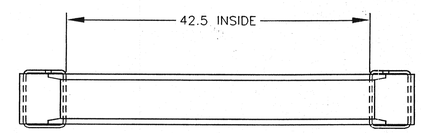

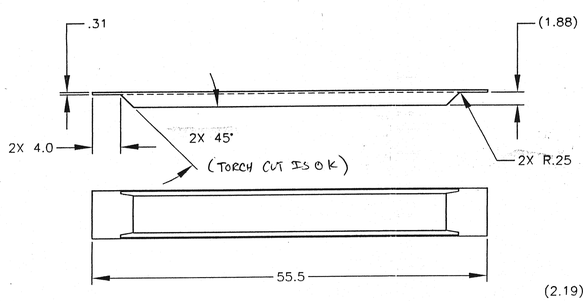

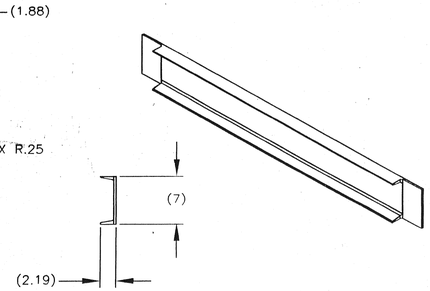

ITEM 1
QTY 2

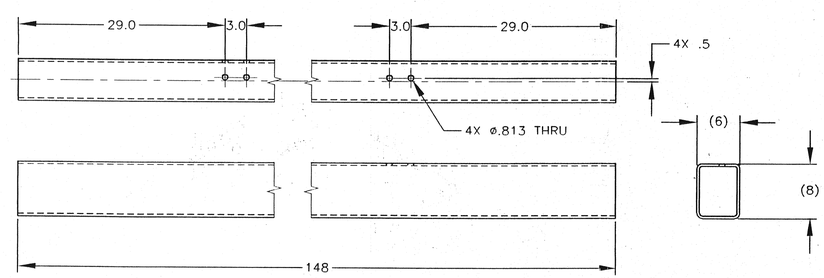

ITEM 2
QTY 2

QTY = 4

REV.	DESCRIPTION	BY	CHK'D
B	CHAMFERED ITEM 1	RDL 11/12/04	RDL 11/15/04
A	ADD HOLES TO ITEM 1	RDL 7/13/04	RDL 7/04

UNLESS NOTED OTHERWISE DIMENSIONS IN INCHES
TOLERANCES
FRACT. ± 1/16
.X± .03
.XX± .01
.XXX± .005
ANGLES± 1Deg

MTM
Meyer Tool & Mfg., Inc.

BY: CME 08/06/03 | CHK'D: RDL 11/3/03

00918-0065 SHIPPING FRAME
SADDLE FRAME ASSY

THIS DRAWING AND DESIGN IS THE PROPERTY OF MEYER TOOL AND MFG. CO. UNAUTHORIZED USE OR REPRODUCTION IS STRICTLY PROHIBITED.

SCALE	CUSTOMER	JOB NO.	DWG.	SIZE: D
1:10	LBNL	00918-0065	SF12	REV. B