ITEM	QTY	DESCRIPTION	MAT'L

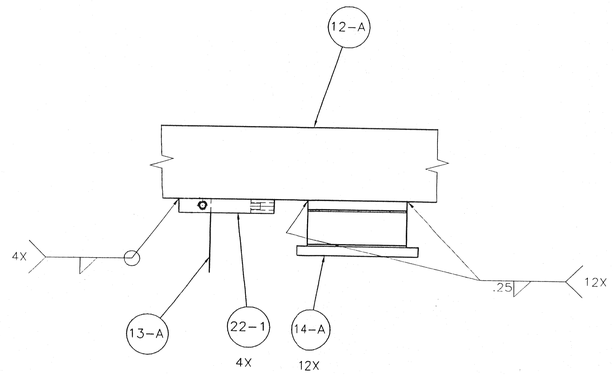

DETAIL A
SCALE 1:7.5

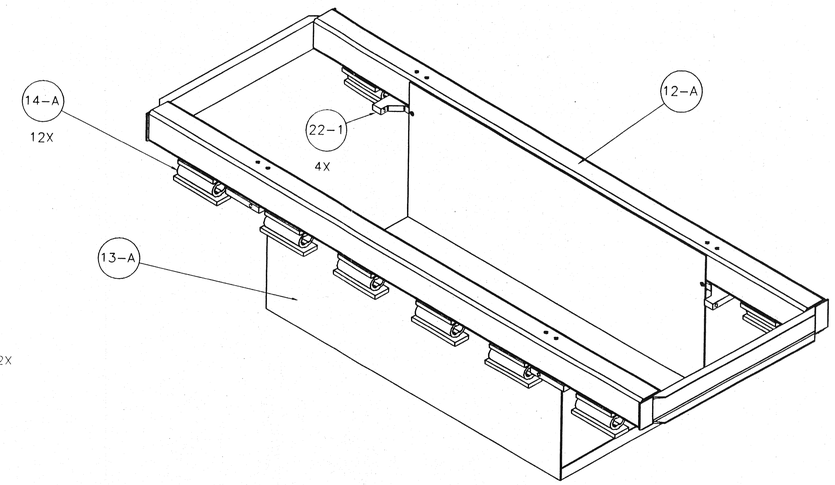

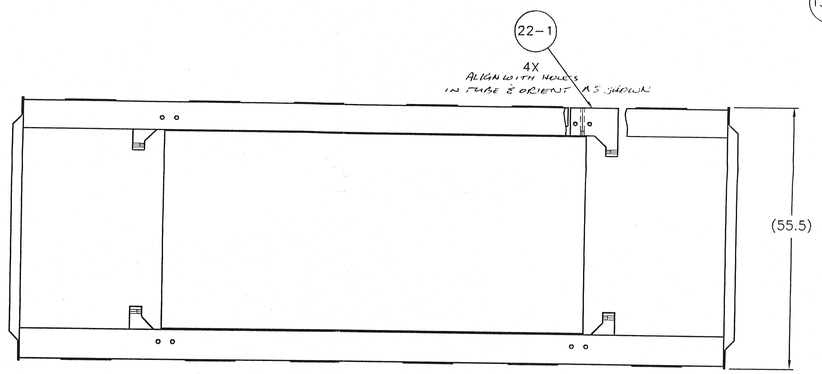

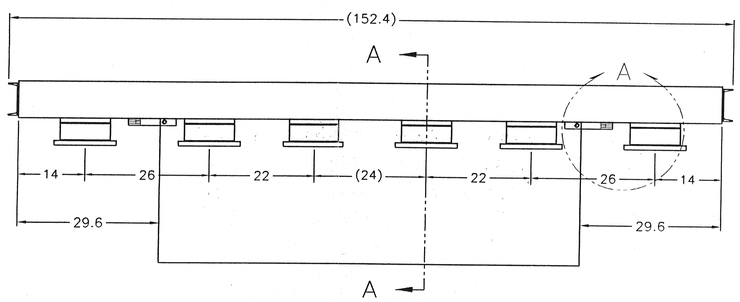

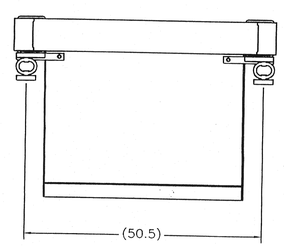

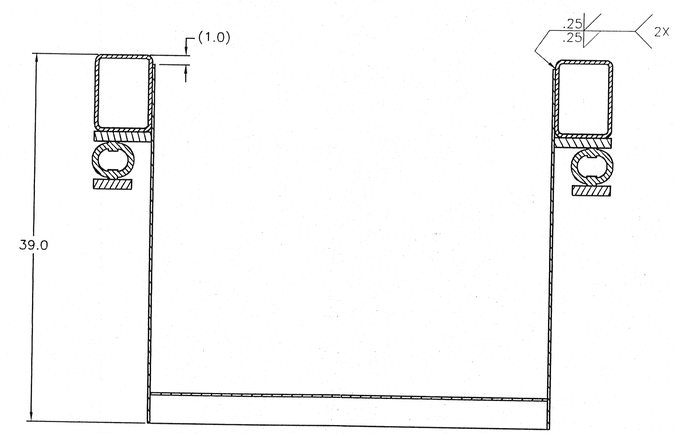

SECTION A-A

QTY = 4

REV.	DESCRIPTION	BY	CHK'D
A	ADD RESTRAINT PLATES - ITEM 22-1	RDL 11/11/04	RDL 11/12/04
A	ADD HOLES TO MAIN BEAMS	RDL 7/13/04	RDL 7/13/04

UNLESS NOTED OTHERWISE DIMENSIONS IN INCHES
TOLERANCES
FRACT. ± 1/16
.X ± .03
.XX ± .01
.XXX ± .005
ANGLES ± 1Deg

MTM
Meyer Tool & Mfg., Inc.

BY: CME 9/18/03 CHK'D: RDL 11/10/03

00918-0065 SHIPPING FRAME
SADDLE WELDMENT

THIS DRAWING AND DESIGN IS THE PROPERTY OF MEYER TOOL AND MFG. CO. UNAUTHORIZED USE OR REPRODUCTION IS STRICTLY PROHIBITED.

SCALE	CUSTOMER	JOB NO.	DWG.	SIZE: D
1:15	LBNL	00918-0065	SF11	REV. B