ITEM	QTY	DESCRIPTION	MAT'L
1	4	4" x 4" x 1/4" x 161"LG STRUCTURAL TUBE	A500 GR B
2	4	4" x 4" x 1/4" x 54.5" LG STRUCTURAL TUBE	A500 GR B
3	4	4" x 4" x 1/4" x 20" LG STRUCTURAL TUBE	A500 GR B
4	4	4" x 4" x 1/4" x 27.75" LG STRUCTURAL TUBE	A500 GR B
5	6	4" x 2" x 1/4" x 20" LG STRUCTURAL TUBE	A500 GR B
6	2	C4 x 5.4" x 153" LG CHANNEL	A36

NOTES:
1. QUANTITIES ARE FOR 1 FRAME, 4 FRAMES RQD.

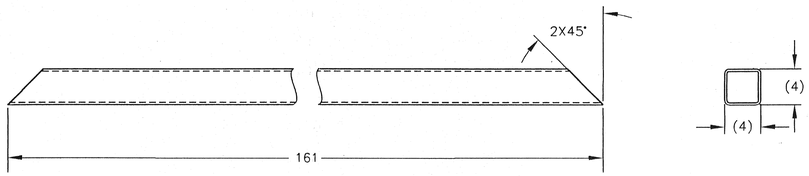

ITEM 1

QTY 4

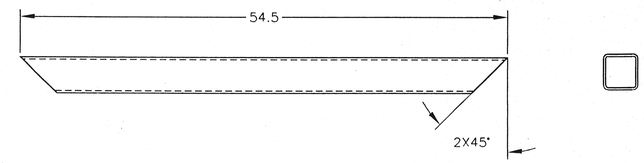

ITEM 2

QTY 4

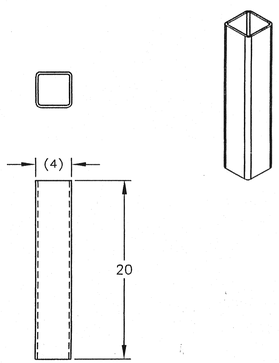

ITEM 3

QTY 4

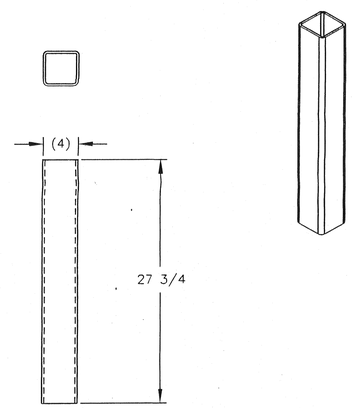

ITEM 4

QTY 4

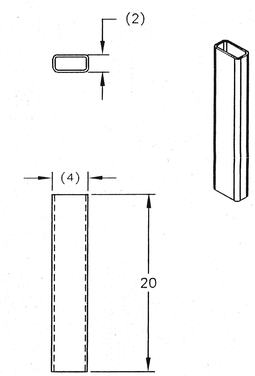

ITEM 5

QTY 6

QTY = 4

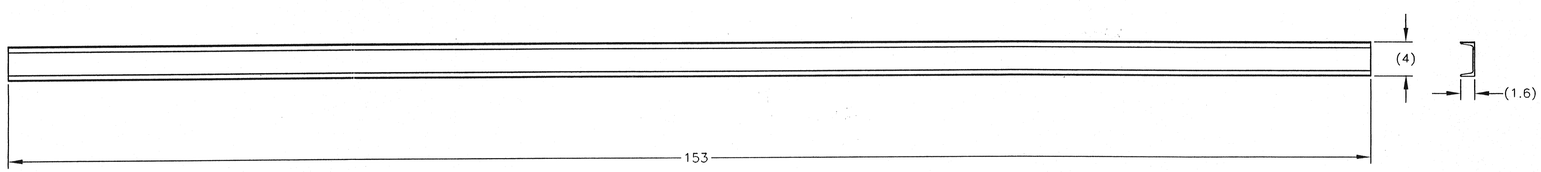

ITEM 6

QTY 2

REV.	DESCRIPTION	BY	CHK'D
A	ADDED CHAMFERS TO ITEMS 9, 10, 11	RDL 11/12/04	

UNLESS NOTED OTHERWISE DIMENSIONS IN INCHES

TOLERANCES
FRACT. ± 1/16
.X± .03
.XX± .01
.XXX± .005
ANGLES± 1Deg

MTM
Meyer Tool & Mfg., Inc.

BY: CME 08/05/03 CHK'D:

00918-0065 SHIPPING FRAME
BASE FRAME BEAM COMPONENTS

SCALE 1:8

CUSTOMER LBNL

JOB NO. 00918-0065 DWG. SF09 SIZE: D REV. A

SHT. 1 OF 2

THIS DRAWING AND DESIGN IS THE PROPERTY OF MEYER TOOL AND MFG. CO. UNAUTHORIZED USE OR REPRODUCTION IS STRICTLY PROHIBITED.