ITEM	QTY	DESCRIPTION	MAT'L

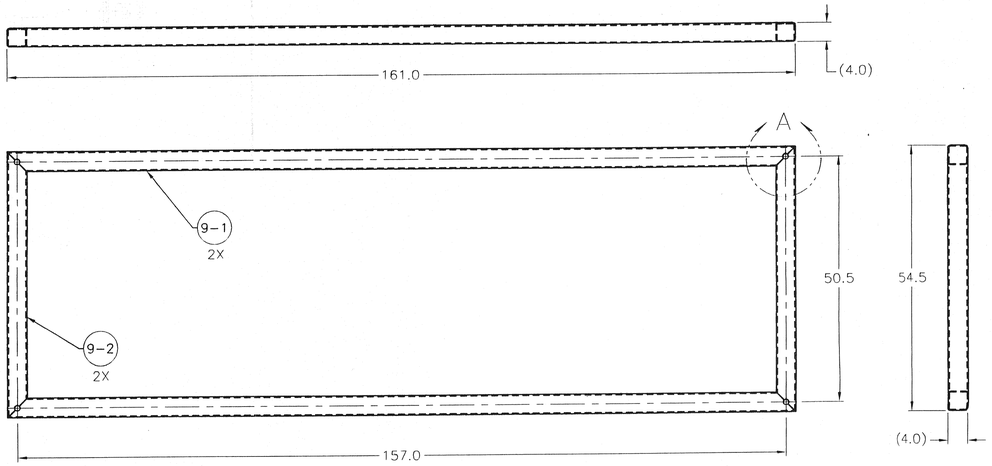

ASSEMBLIES A & B

QTY 1 EACH PER FRAME
DO NOT DRILL ASSY B

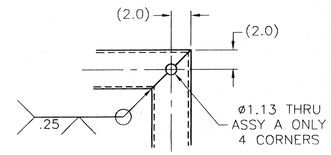

DETAIL A
SCALE 1:7.5

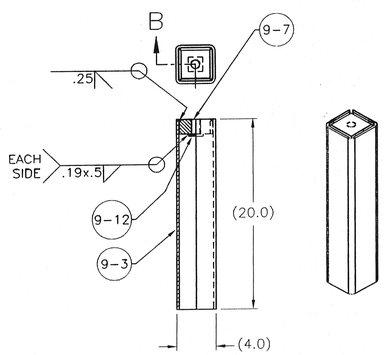

SECTION B-B

ASSEMBLY C

QTY 4 PER FRAME
SCALE 1:7.5

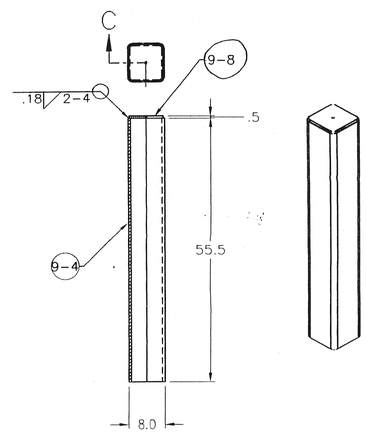

SECTION C-C

ASSEMBLY D

QTY 4 PER FRAME
SCALE 1:7.5

QTY=4

REV.	DESCRIPTION	BY	CHK'D
UNLESS NOTED OTHERWISE DIMENSIONS IN INCHES	MTM Meyer Tool & Mfg., Inc.		
TOLERANCES	BY: CME 9/18/03	CHK'D: RDC 9/6/03	
FRACT. ± 1/16 .X± .03 .XX± .01 .XXX± .005 ANGLES± 1Deg	00918-0065 SHIPPING FRAME BASE FRAME COMPONENT WELDING		

THIS DRAWING AND DESIGN IS THE PROPERTY OF MEYER TOOL AND MFG. CO. UNAUTHORIZED USE OR REPRODUCTION IS STRICTLY PROHIBITED.

SCALE	CUSTOMER	JOB NO.	DWG.	SIZE: D
1:15	LBNL	00918-0065	SF08	REV. 0