ITEM	QTY	DESCRIPTION	MAT'L

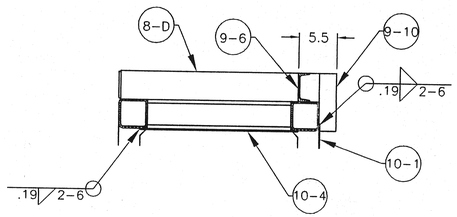

SECTION C-C
SCALE 1:10

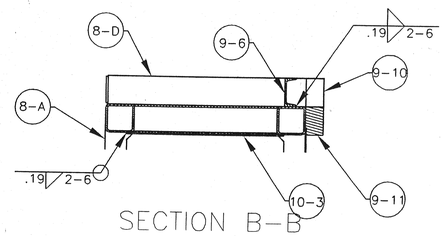

SECTION B-B
SCALE 1:10

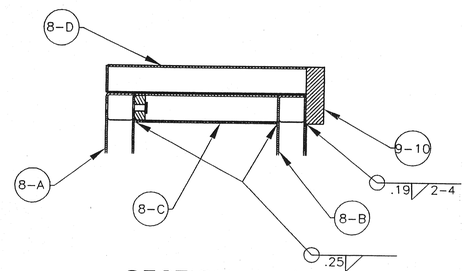

SECTION A-A
SCALE 1:10

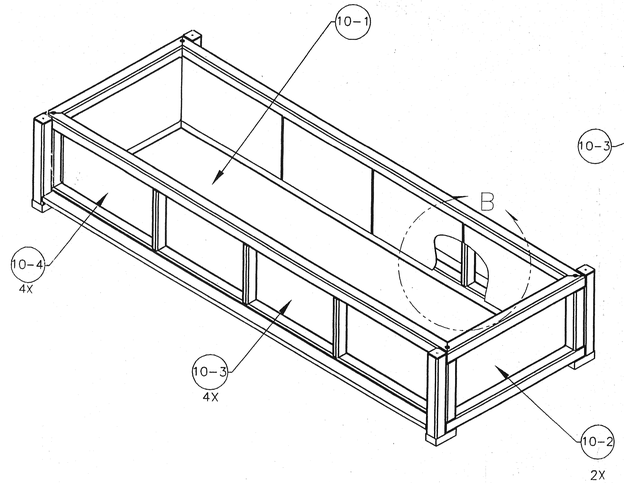

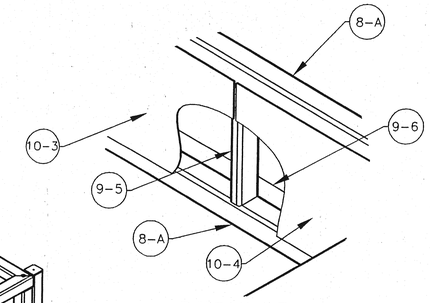

DETAIL B

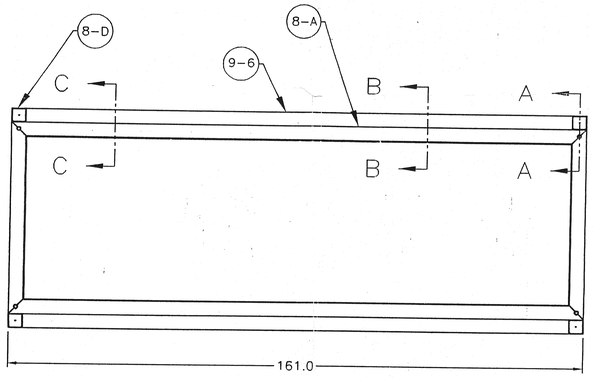

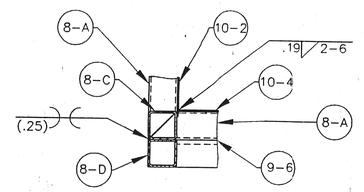

SECTION D-D
SCALE 1:10

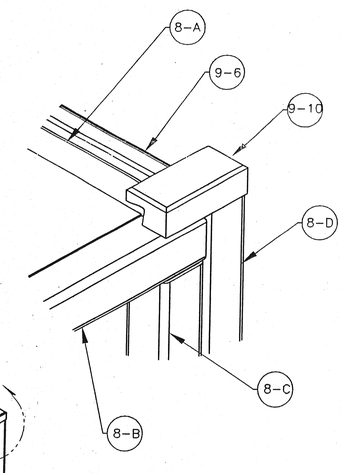

DETAIL A

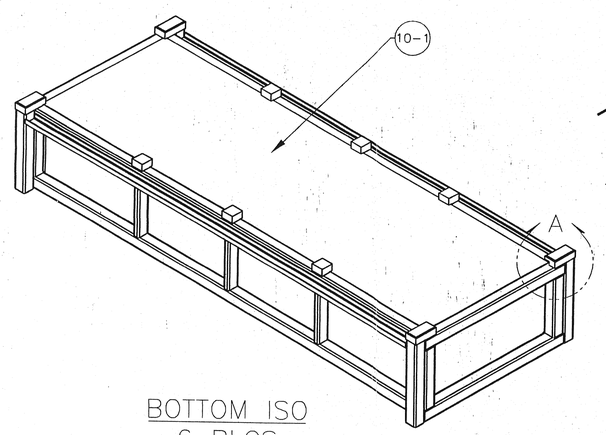

BOTTOM ISO
6 PLCS

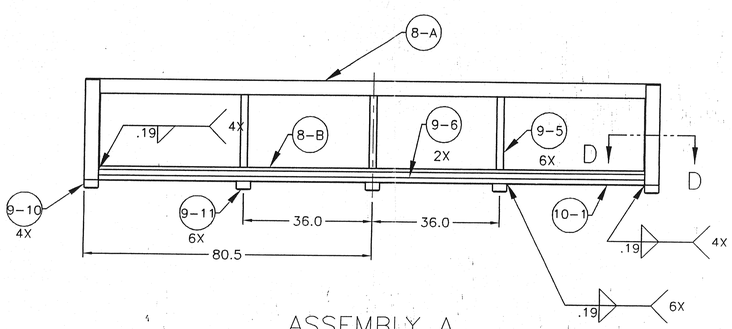

ASSEMBLY A

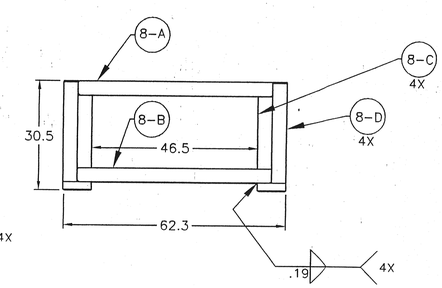

QTY = 4

A	CHAMFERED BASE PLATES	RDL 11/12/04	RDL 11/12/04
REV.	DESCRIPTION	BY	CHK'D

UNLESS NOTED OTHERWISE DIMENSIONS IN INCHES

TOLERANCES
FRACT. ± 1/16
.X ± .03
.XX ± .01
.XXX ± .005
ANGLES ± 1Deg

MTM
Meyer Tool & Mfg., Inc.

BY: CME 10/06/03 | CHK'D: RDL 10/6/03

00918-0065 SHIPPING FRAME
BASE FRAME WELDMENT

SCALE 1:20 | CUSTOMER LBNL | JOB NO. 00918-0065 | DWG. SF07 | SIZE: D | REV. A

THIS DRAWING AND DESIGN IS THE PROPERTY OF MEYER TOOL AND MFG. CO. UNAUTHORIZED USE OR REPRODUCTION IS STRICTLY PROHIBITED.