NOTES: (UNLESS OTHERWISE SPECIFIED)

1. THIS IS A CRYOGENIC VACUUM COMPONENT.
2. CLEANING PROCEDURE : PER VENDOR SPECIFICATION WITH LBNL APPROVAL.
3. LUBRICANT IN ROD END MUST BE VACUUM COMPATIBLE AND IS SUBJECT TO LBNL APPROVAL.
4. DIMENSIONS AND TOLERANCING PER ANSI Y14.5M-1982. UNITS ARE IN INCHES [mm] UNLESS OTHERWISE SPECIFIED.

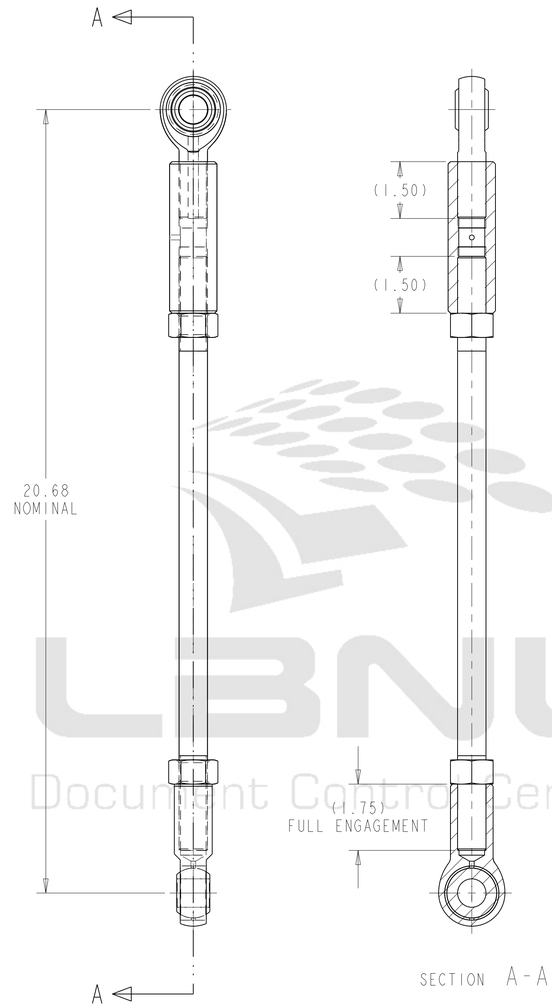

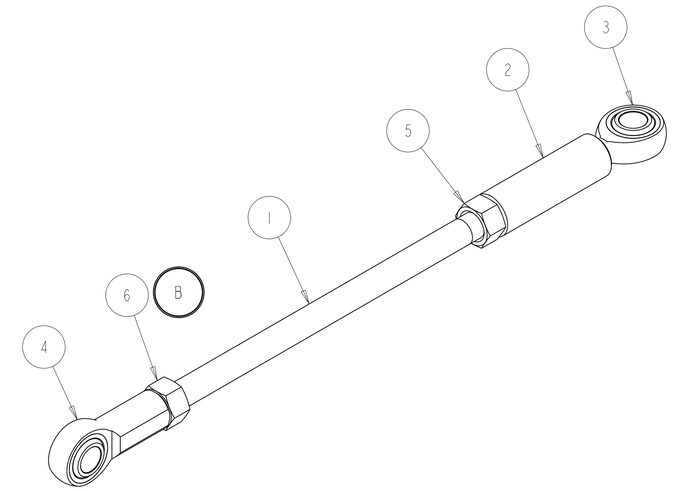

REQD	ITEM	PART NO.	DESRIPTION	MATERIAL
	6	-	NUT, 3/4"-16 UNF, RIGHT McMASTER #91845A175	SS 18-8
	5	-	NUT, 3/4"-16 UNF, LEFT McMASTER #95195A230	SS 18-8
	4	-	ROD END, FEMALE, AURORA SW-12	-
	3	-	ROD END, MALE, AURORA SM-12 OR EQUIV.	-
	2	25M985	TURNBUCKLE 3/4"-16 UNF	SS
	1	25M993	INVAR ROD, SHORT	INVAR 36

REV	AUTHOR	APPROVER	DATE	CHANGE DESCRIPTION
B	RLM	JPZ	5/5/04	CORRECT McMASTER # FOR RH 3/4-16 UNF NUT
A	RLM	JPZ	2/11/04	RELEASE TO PRINT ROOM

UNLESS OTHERWISE SPECIFIED
TOLERANCES: .X± 0.1 .XX± 0.03 .XXX± 0.010
FRACTIONS: ± 1/64
ANGLES: ± 1.00°
MACH. SURFS.: 125√ OR BETTER
REF:ASME Y14.5M-1994, THREADS ARE CLASS 2
BREAK EDGES .016 MAX. ON MACHINED WORK
REMOVE BURRS, WELD SPLATTER & LOOSE SCALE

PROJECT NAME:
UNIQUE NUMBER:
DO NOT SCALE PRINT
SCALE: 0.500
CATEGORY CODE: LH2003
THIRD ANGLE PROJECTION

ERNEST ORLANDO LAWRENCE BERKELEY NATIONAL LABORATORY
UNIVERSITY OF CALIFORNIA

LHC IR FEEDBOX
CRYOGENICS
VERTICAL STRUT ROD ASSEMBLY, D1 SIDE

SHEET 1 OF 1 | SIZE: D | DWG NO: 25M995 | REV B

Officially Released to the LBNL Document Control Center
Released: May 5th, 2004 DCC Auth Key: TKLBF4ODEK
Downloaded by: Daniel Pulsifer at April 09, 2007 10:57:49