DESCRIPTION	MATERIAL	MAT. LOCATION
ROUND	SS 304L	-

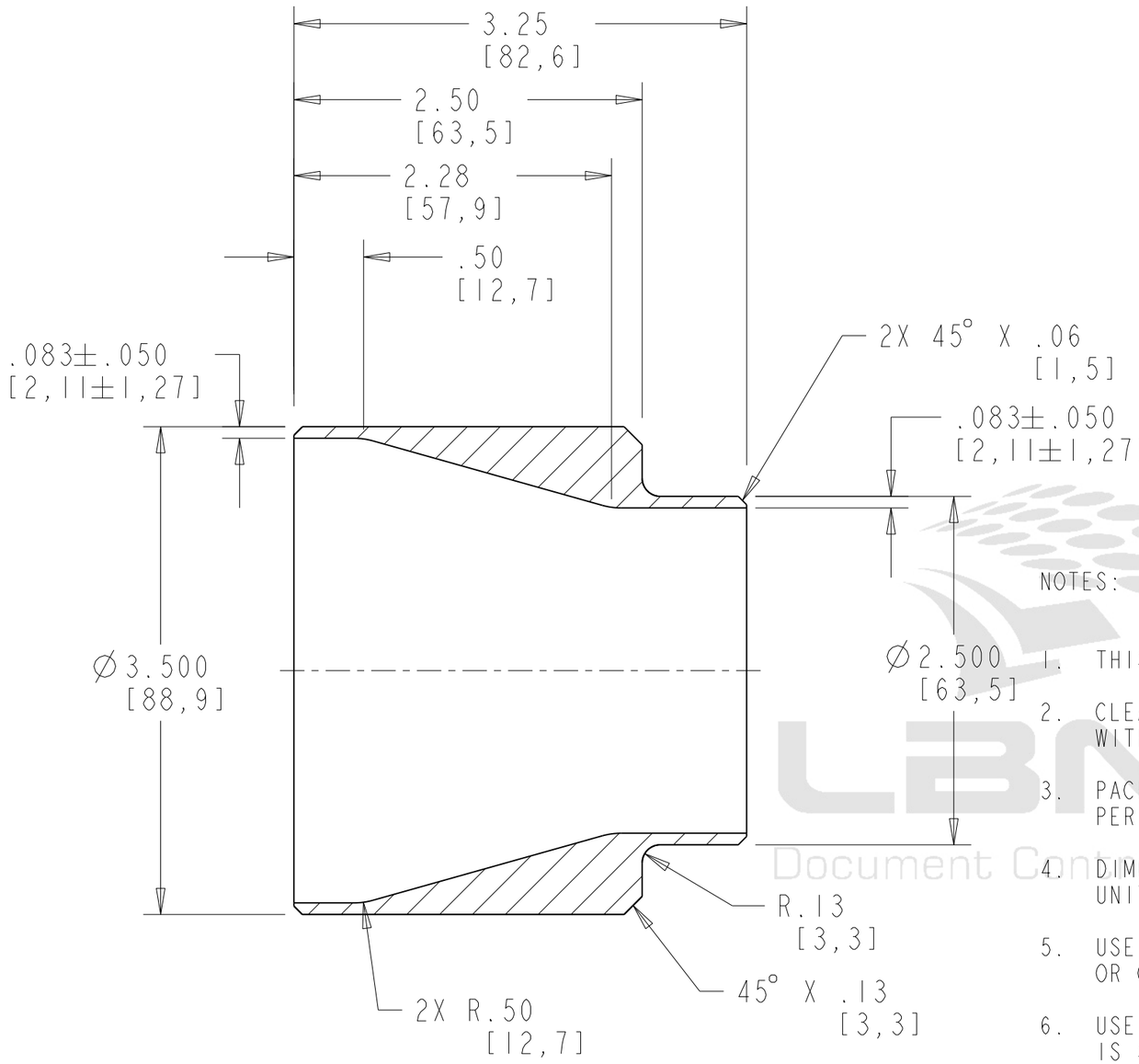

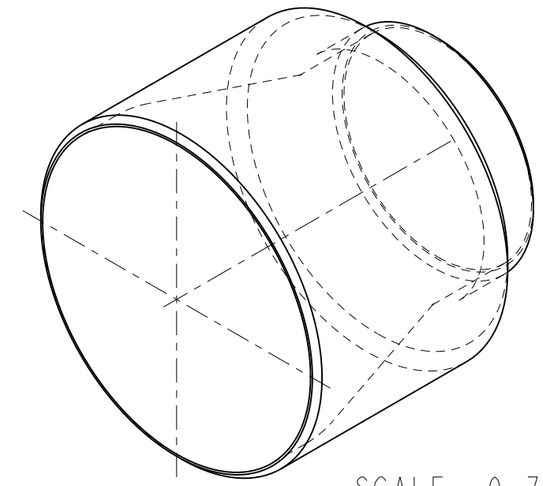

SCALE 0.750

NOTES: (UNLESS OTHERWISE SPECIFIED)

1. THIS IS A CRYOGENIC VACUUM COMPONENT.
2. CLEANING PROCEDURE : PER VENDOR SPECIFICATION WITH LBNL APPROVAL.
3. PACKAGING AND STORAGE PROCEDURE OF THE COMPONENTS: PER VENDOR SPCIFICATION WITH LBNL APPROVAL.
4. DIMENSIONS AND TOLERANCING PER ANSI Y14.5M-1982. UNITS ARE IN INCHES UNLESS OTHERWISE SPECIFIED.
5. USE OF SULFUR OR SILICONE BEARING OILS, LUBRICANTS, OR COOLANTS ARE STRICTLY PROHIBITED.
6. USE OF RESIN OR RUBBER BONDED ABRASIVES UNDER POWER IS STRICTLY PROHIBITED. USE VITREOUS BONDED ABRASIVES ONLY.

Document Control Center

REV	AUTHOR	APPROVER	DATE	CHANGE DESCRIPTION
A	RLM	JPZ	12/8/03	INITIAL RELEASE

UNLESS OTHERWISE SPECIFIED

TOLERANCES: .X± 0.1 .XX± 0.03 .XXX±0.010; FRACTIONS: ± 1/64; ANGLES: ± 1.00°; MACH. SURFS.: 125✓ OR BETTER

REF:ASME Y14.5M-1994, THREADS ARE CLASS 2

BREAK EDGES .016 MAX. ON MACHINED WORK

REMOVE BURRS, WELD SPLATTER & LOOSE SCALE

PROJECT NAME:

UNIQUE NUMBER:

DO NOT SCALE PRINT — SCALE: 1.000 — CATEGORY CODE: LH2003

THIRD ANGLE PROJECTION

ERNEST ORLANDO LAWRENCE BERKELEY NATIONAL LABORATORY
UNIVERSITY OF CALIFORNIA

LHC IR FEEDBOX
CRYOGENICS
TRANSITION ∅3.5" TO ∅2.5"

SHEET 1 OF 1 — SIZE: B — DWG NO: 25M980 — REV A

Dwg. File: 25M980 Model File: 25M980

Rev. 8/02/2003 R F La Mai 19

Officially Released to the LBNL Document Control Center
Released: January 23rd, 2004 DCC Auth Key: FEOCECTI9

Downloaded by: Daniel Pulsifer at April 09, 2007 10:57:48