DESCRIPTION	MATERIAL	MAT. LOCATION
BAR	CDA 101	-

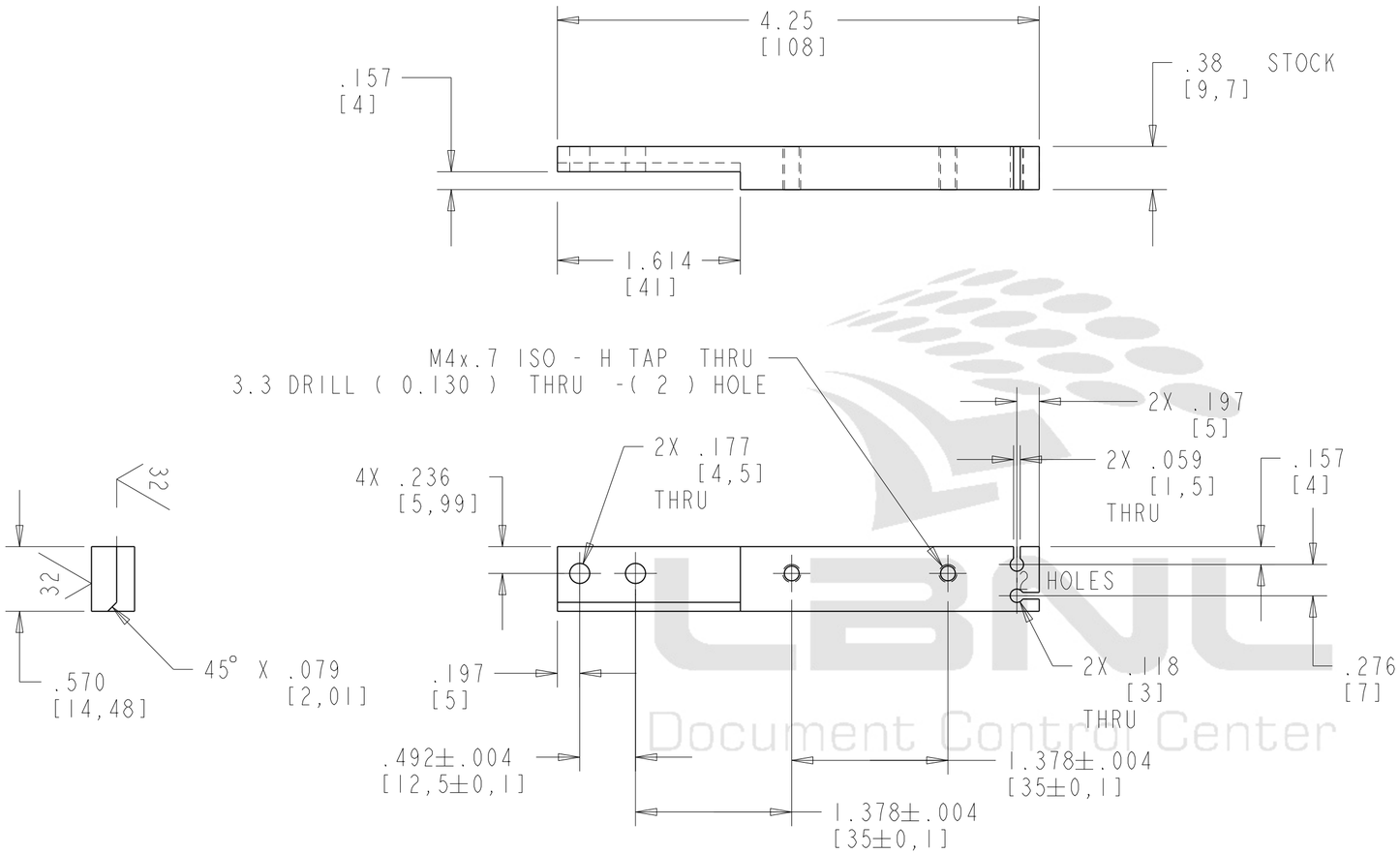

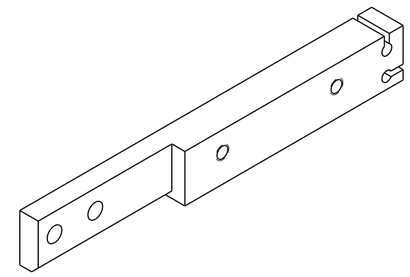

NOTES: (UNLESS OTHERWISE SPECIFIED)

1. THIS IS A CRYOGENIC VACUUM COMPONENT.
2. CLEANING PROCEDURE : PER VENDOR SPECIFICATION WITH LBNL APPROVAL.
3. PACKAGING AND STORAGE PROCEDURE OF THE COMPONENTS: PER VENDOR SPCIFICATION WITH LBNL APPROVAL.
4. DIMENSIONS AND TOLERANCING PER ANSI Y14.5M-1982. UNITS ARE IN INCHES UNLESS OTHERWISE SPECIFIED.

REV	AUTHOR	APPROVER	DATE	CHANGE DESCRIPTION
A	RLM	JPZ	12/8/03	INITIAL RELEASE

UNLESS OTHERWISE SPECIFIED

TOLERANCES:
- .X± 0.5 .XX± 0.05 .XXX± 0.010
- FRACTIONS: ± 1/64
- ANGLES: ± 1.00°
- MACH. SURFS.: 125✓ OR BETTER

REF:ASME Y14.5M-1994, THREADS ARE CLASS 2
BREAK EDGES .016 MAX. ON MACHINED WORK
REMOVE BURRS, WELD SPLATTER & LOOSE SCALE

PROJECT NAME:

UNIQUE NUMBER:

DO NOT SCALE PRINT — SCALE: 1.000

CATEGORY CODE: LH2003

THIRD ANGLE PROJECTION

ERNEST ORLANDO LAWRENCE
BERKELEY NATIONAL LABORATORY
UNIVERSITY OF CALIFORNIA

LHC IR FEEDBOX
CRYOGENICS
SUPPORT PLATE

SHEET 1 OF 1 | SIZE: C | DWG NO: 25M978 | REV A

Dwg. File: 25M978 Model File: 25M978

Officially Released to the LBNL Document Control Center
Released: January 23rd, 2004 DCC Auth Key: G9VGTQKHZY

Downloaded by: Daniel Pulsifer at April 09, 2007 10:57:48