DESCRIPTION	MATERIAL	MAT. LOCATION
BAR	CDA 101	-

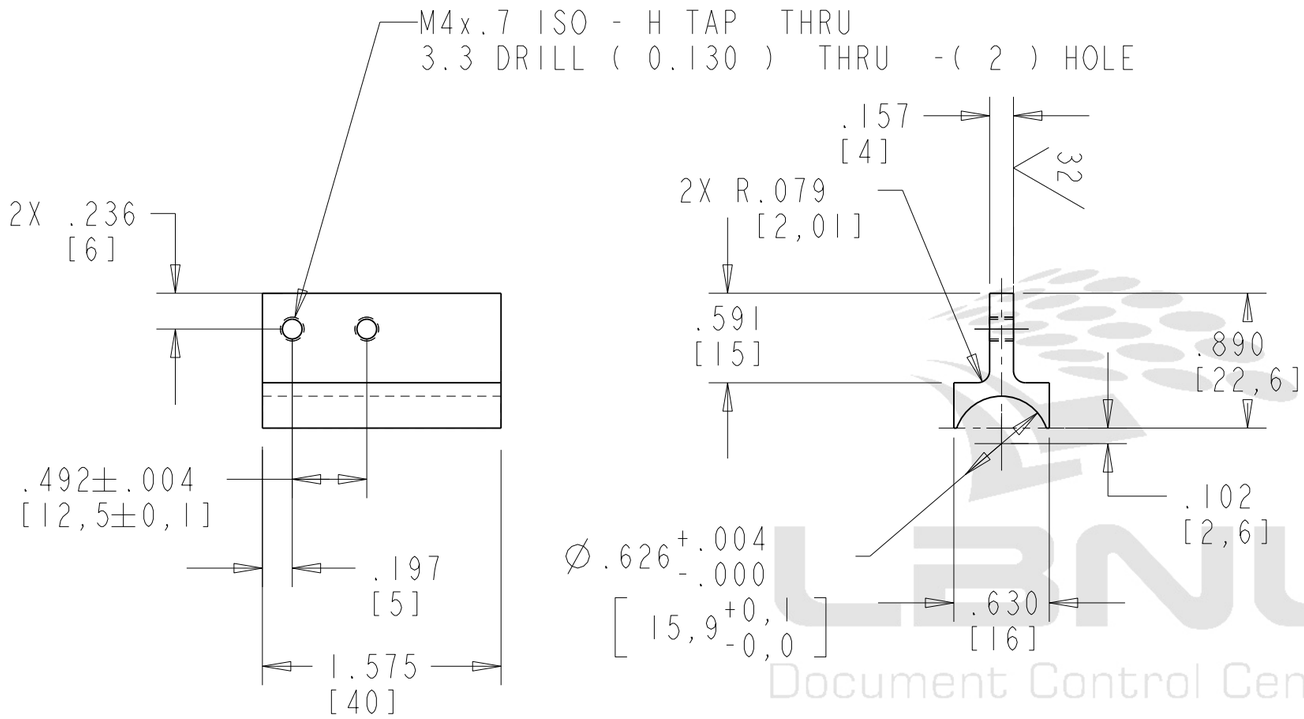

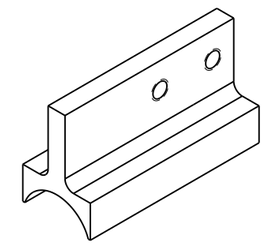

NOTES: (UNLESS OTHERWISE SPECIFIED)

1. THIS IS A CRYOGENIC VACUUM COMPONENT.
2. CLEANING PROCEDURE : PER VENDOR SPECIFICATION WITH LBNL APPROVAL.
3. PACKAGING AND STORAGE PROCEDURE OF THE COMPONENTS: PER VENDOR SPCIFICATION WITH LBNL APPROVAL.
4. DIMENSIONS AND TOLERANCING PER ANSI Y14.5M-1982. UNITS ARE IN INCHES UNLESS OTHERWISE SPECIFIED.

LBNL Document Control Center

REV	AUTHOR	APPROVER	DATE	CHANGE DESCRIPTION
A	RLM	JPZ	12/8/03	INITIAL RELEASE

UNLESS OTHERWISE SPECIFIED
TOLERANCES: .X± 0.5 .XX± 0.05 .XXX±0.010
FRACTIONS: ± 1/64
ANGLES: ± 1.00°
MACH. SURFS.: 125 OR BETTER
REF:ASME Y14.5M-1994, THREADS ARE CLASS 2
BREAK EDGES .016 MAX. ON MACHINED WORK
REMOVE BURRS, WELD SPLATTER & LOOSE SCALE

PROJECT NAME:
UNIQUE NUMBER:
DO NOT SCALE PRINT
SCALE: 1.000
CATEGORY CODE: LH2003
THIRD ANGLE PROJECTION

ERNEST ORLANDO LAWRENCE BERKELEY NATIONAL LABORATORY
UNIVERSITY OF CALIFORNIA

LHC IR FEEDBOX
CRYOGENICS
THERMOMETER PAD

1 SHEET OF 1 | SIZE: B | DWG NO: 25M977 | REV A

Dwg. File: 25M977 Model File: 25M977

Officially Released to the LBNL Document Control Center
Released: January 23rd, 2004 DCC Auth Key: OEUWUJCZ8Q
Downloaded by: Daniel Pulsifer at April 09, 2007 10:57:48