DWG. NO.	SIZE	REV.	SH.
25M9592	A		1

DESCRIPTION	MATERIAL	MAT. LOCATION
RING	SS 304L	-

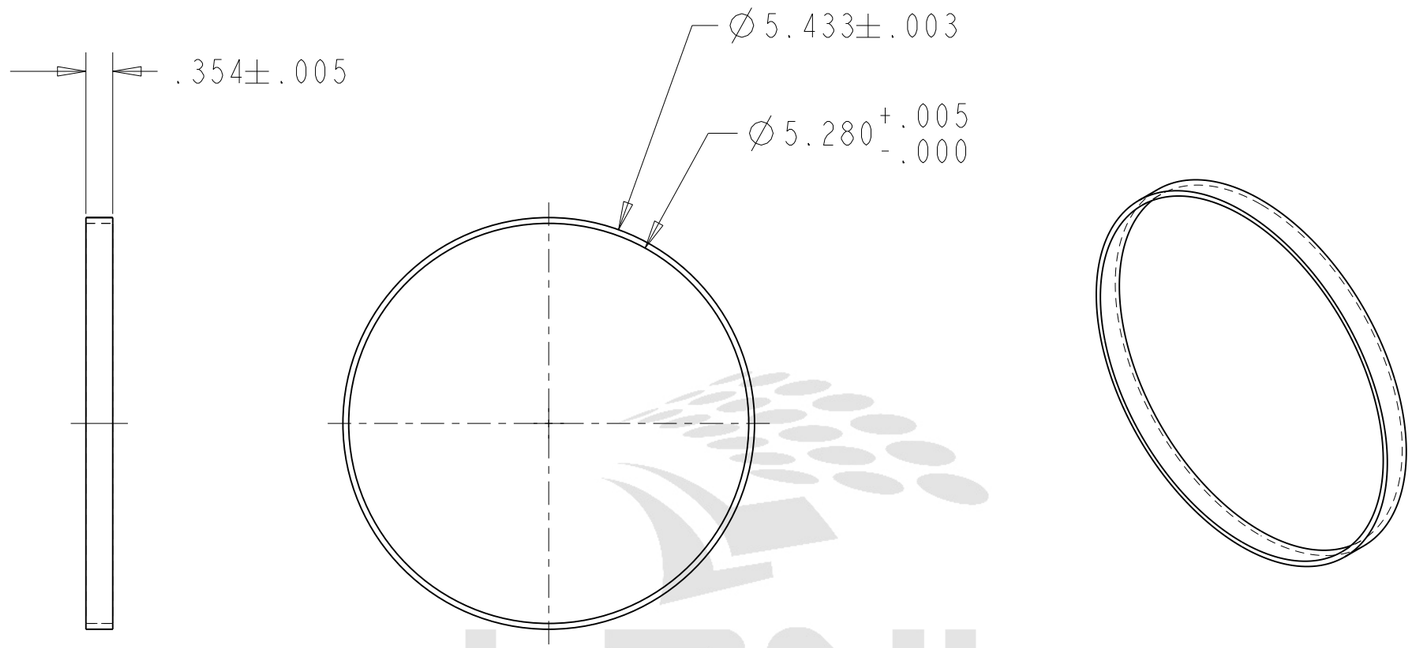

LBNL
Document Control Center

REV	DWG	CHK	ZONE	DATE	CHANGES
A	RLM	DPO		2/26/03	INITIAL RELEASE

UNLESS OTHERWISE SPECIFIED

TOLERANCES		
	X.X ± 0.1	FRAC. ± 1/64
	X.XX ± 0.03	Angles ± 1.00°
	X.XXX ± 0.010	FINISH 125 √(µin)

DO NOT SCALE PRINT

THREADS ARE CLASS 2
CHAMFER ENDS OF ALL SCREW TREADS 30°
CUT ROUND, 1.5 THREAD RELIEF ON MACHINED THREADS
BREAK EDGES .016 MAX. ON MACHINED WORK
REMOVE BURRS, WELD SPLATTER & LOOSE SCALE
IN ACCORDANCE WITH ASME Y14.5M & B46.1

SHOP ORDERS

ACCT NO.	NO. REQD	SER NO.	-
		DATE ISSD	-
DEL TO		DATE REQD	-
SURFACE TREATMT	-		
IDENT METHOD	TAG		
PROJECT NUMBER	N/A		N/A (logo)
PROJECT NAME	N/A		
DWG BY	R LA MANTIA	DATE	24-Feb-03
CHK BY	J ZBASNIK	DATE	25-Feb-03
APR BY	J ZBASNIK	DATE	25-Feb-03

ERNEST ORLANDO LAWRENCE
BERKELEY NATIONAL LABORATORY
UNIVERSITY OF CALIFORNIA - BERKELEY

LHC IR FEEDBOX
SECOND LINE TITLE
WELD RING, ID 134mm

MICROFILMED:	DWG. TYPE	SHOWN ON	SCALE: 0.500	DO NOT SCALE PRINTS
	PART	-	SHEET 1 OF 1	
PATENT CLEAR:	DESIGN ACCT. NO.	CATEGORY CODE	DWG. NO.	SIZE / REV.
	Z5LCE3	LH2003	25M9592	A

Dwg. File: 25M959 Model File: 25M959

Rev. 1/29/2003 J. R. Osborn

Officially Released to the LBNL Document Control Center
Released: March 5th, 2003 DCC Auth Key: 1XUJVN3UF1
Downloaded by: Daniel Pulsifer at April 09, 2007 10:57:48