| DWG. NO. | SIZE | REV. | SH. |
|---|---|---|---|
| 25M9084 | B | 1 | |

| ITEM | PART NO | REQD | DESCRIPTION | MATERIAL |
|---|---|---|---|---|
| 3 | 251307 | | FLANGE, FNAL# 5520-MB-390033B, MODIFIED | - |
| 2 | - | | 1.5" PIPE, SCH 10 | SS 304L |
| 1 | - | | 3" PIPE, SCH 10 | SS 304L |

NOTES: (UNLESS OTHERWISE SPECIFIED)

1. THIS IS A CRYOGENIC VACUUM COMPONENT.
2. CLEAN AND DEGREASE PARTS BEFORE WELDING.
3. STORE IN PLASTIC BAG MARKED WITH "25M908".
4. DIMENSIONS AND TOLERANCING PER ANSI Y14.5M-1982. UNITS ARE IN INCHES [mm] UNLESS OTHERWISE SPECIFIED.
5. USE OF SULFUR OR SILICONE BEARING OILS, LUBRICANTS, OR COOLANTS ARE STRICTLY PROHIBITED.
6. USE OF RESIN OR RUBBER BONDED ABRASIVES UNDER POWER IS STRICTLY PROHIBITED. USE VITREOUS BONDED ABRASIVES ONLY.
7. REMOVE ALL BURRS, REAM AND CLEAN ENDS.
8. PERFORM ACCEPTANCE TESTS PER APPLICABLE LBNL FABRICATION TRAVELER.
9. LEAK RATE NOT TO EXCEED 5E-10 STANDARD CUBLIC CENTIMETERS PER SECOND, HELIUM, AFTER 2X THERMAL SHOCKS TO LN TEMP.
10. WELD SHRINKAGE NOT ACCOUNTED FOR.

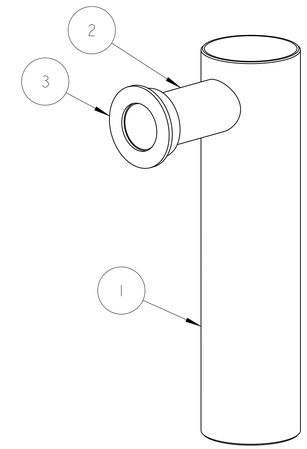


SCALE 3/8

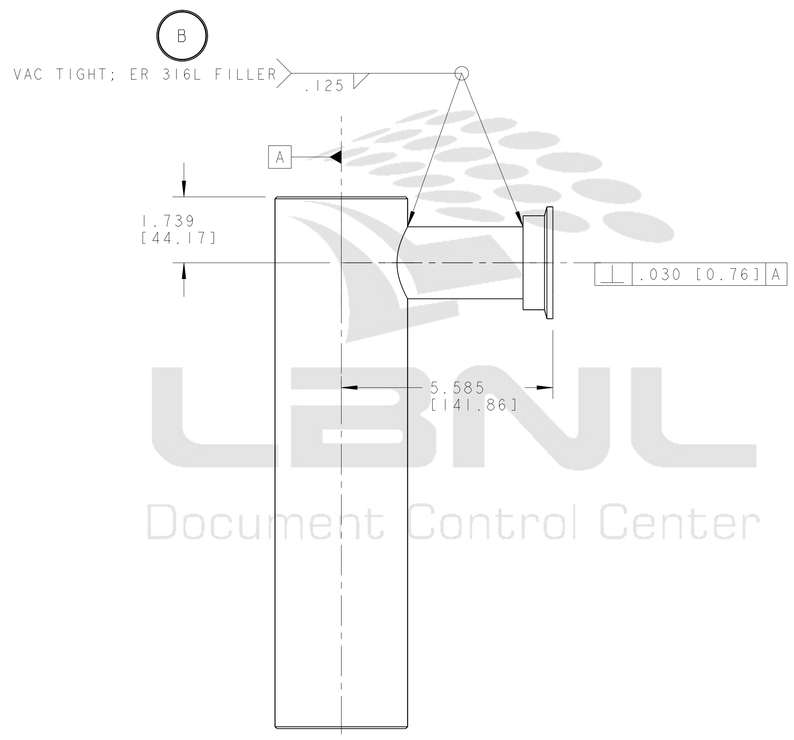


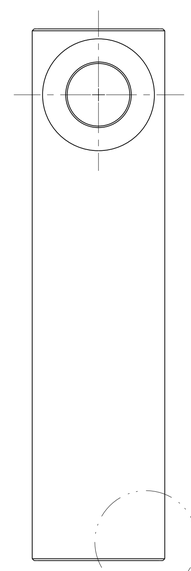

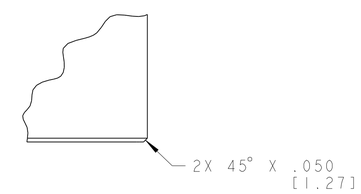


DETAIL WELD PREP
SCALE 1/1

SEE DETAIL WELD PREP

LBNL
Document Control Center

| REV | DWG | CHK | ZONE | DATE | CHANGES |
|---|---|---|---|---|---|
| B | RLM | JPZ | | 6/23/03 | 316L WAS 308L |
| A | RLM | JPZ | | 2/21/03 | INITIAL RELEASE |

UNLESS OTHERWISE SPECIFIED

| TOLERANCES | | |
|---|---|---|
| | X.X ± 0.1 | FRAC. ± 1/64 |
| | X.XX ± 0.03 | Angles ± 1.00° |
| | X.XXX ± 0.010 | FINISH 125 |

DO NOT SCALE PRINT

THREADS ARE CLASS 2
CHAMFER ENDS OF ALL SCREW TREADS 30°
CUT ROUND, 1.5 THREAD RELIEF ON MACHINED THREADS
BREAK EDGES .016 MAX. ON MACHINED WORK
REMOVE BURRS, WELD SPLATTER & LOOSE SCALE
IN ACCORDANCE WITH ASME Y14.5M & B46.1

SHOP ORDERS

| | | | |
|---|---|---|---|
| ACCT NO. | NO. REQD | DATE ISSD | - |
| DEL TO | | DATE REQD | - |
| SURFACE TREATMT | - | | |
| IDENT METHOD | TAG | | |
| PROJECT NUMBER | N/A | | |
| PROJECT NAME | N/A | | |
| DWG BY | S.Bartlett | DATE | 05-feb-03 |
| CHK BY | R LA MANTIA | DATE | 2/14/03 |
| APR BY | J.Zbasnik | DATE | 2/21/03 |

SER NO. -

ERNEST ORLANDO LAWRENCE BERKELEY NATIONAL LABORATORY
UNIVERSITY OF CALIFORNIA - BERKELEY

LHC IR FEEDBOX
CRYOGENICS
MQXI VERTICAL PIPE ASSEMBLY

| MICROFILMED: | DWG. TYPE | SHOWN ON | SCALE: 1/2 | DO NOT SCALE PRINTS |
|---|---|---|---|---|
| | ASSEM | - | SHEET 1 OF 2 | |
| PATENT CLEAR: | DESIGN ACCT. NO. | CATEGORY CODE | DWG. NO. | SIZE / REV. |
| | Z5LCE2 | LH2003 | 25M9084 | B |

Officially Released to the LBNL Document Control Center
Released: July 25th, 2003 DCC Auth Key: NT9E4H1BF7
Downloaded by: Daniel Pulsifer at April 09, 2007 10:57:47

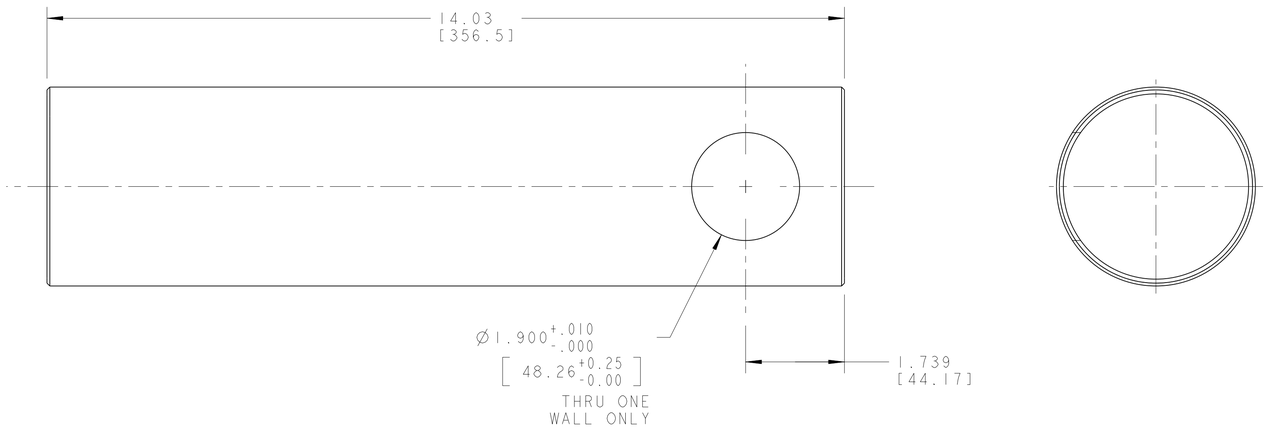


DETAIL ITEM 1

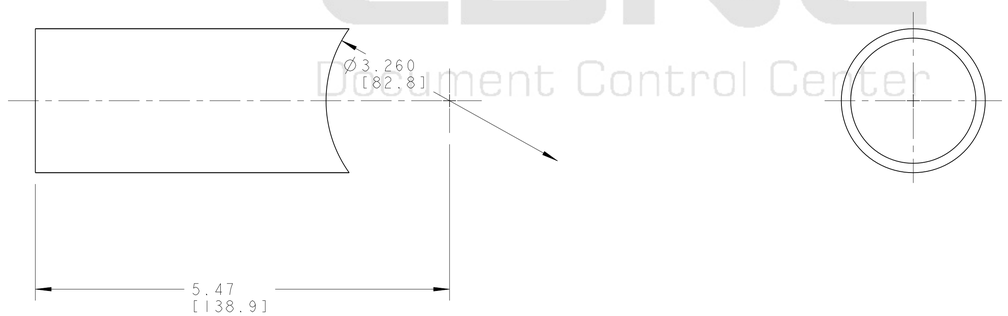


DETAIL ITEM 2

LBNL
Document Control Center

ERNEST ORLANDO LAWRENCE
BERKELEY NATIONAL LABORATORY
UNIVERSITY OF CALIFORNIA - BERKELEY

LHC IR FEEDBOX
CRYOGENICS
MQXI VERTICAL PIPE ASSEMBLY

| MICROFILMED: | DWG. TYPE | SHOWN ON | SCALE: 1/2 | DO NOT SCALE PRINTS |
|---|---|---|---|---|
| | ASSEM | - | SHEET 2 OF 2 | |
| PATENT CLEAR: | DESIGN ACCT. NO. | CATEGORY CODE | DWG. NO. | SIZE / REV. |
| | Z5LCE2 | LH2003 | 25M9084 | B |

Officially Released to the LBNL Document Control Center
Released: July 25th, 2003 DCC Auth Key: NT9E4H1BF7
Downloaded by: Daniel Pulsifer at April 09, 2007 10:57:47