| DWG. NO. | SIZE | REV. | SH. |
|---|---|---|---|
| 25M8622 | B | 1 | |

| DESCRIPTION | MATERIAL | MAT. LOCATION |
|---|---|---|
| ROUND | SS 304L | - |

NOTES: (UNLESS OTHERWISE SPECIFIED)}

1. THIS IS A CRYOGENIC VACUUM COMPONENT.
2. CLEANING PROCEDURE : PER VENDOR SPECIFICATION WITH LBNL . APPROVAL
3. PACKAGING AND STORAGE PROCEDURE OF THE COMPONENTS: PER VENDOR SPCIFICATION WITH LBNL APPROVAL.
4. DIMENSIONS AND TOLERANCING PER ANSI Y14.5M-1982. UNITS ARE IN INCHES [mm] UNLESS OTHERWISE SPECIFIED.
5. USE OF SULFUR OR SILICONE BEARING OILS, LUBRICANTS, OR COOLANTS ARE STRICTLY PROHIBITED.
6. USE OF RESIN OR RUBBER BONDED ABRASIVES UNDER POWER IS STRICTLY PROHIBITED. USE VITREOUS BONDED ABRASIVES ONLY.

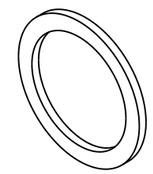

SCALE 1/4

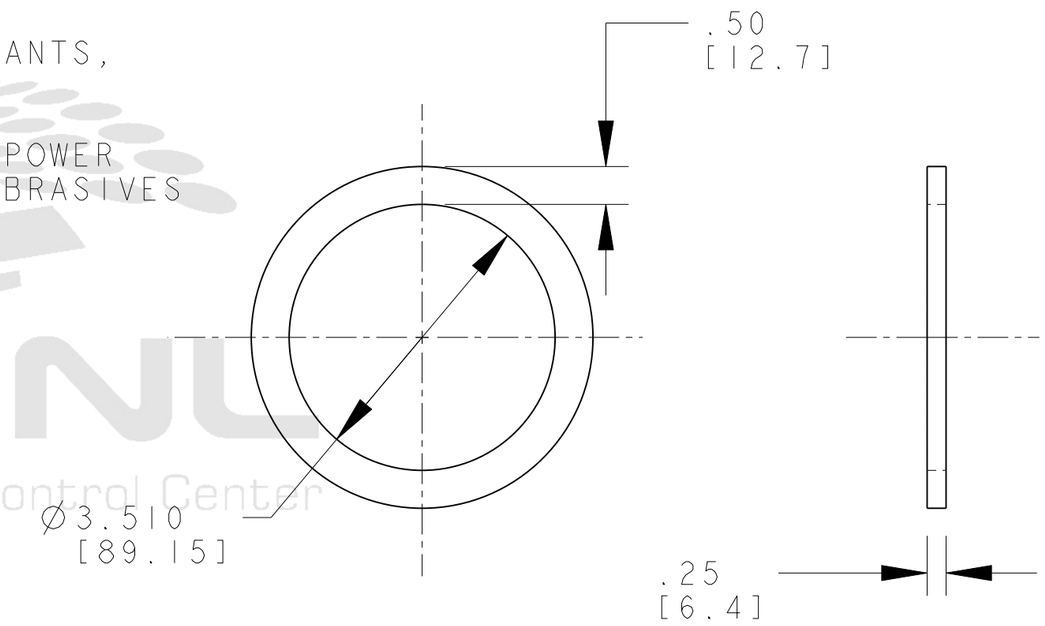


LBNL
Document Control Center

| REV | DWG | CHK | ZONE | DATE | CHANGES |
|---|---|---|---|---|---|
| B | ARH | DPO | | 02/26/03 | COSMETIC CHANGES TO DRAWING |
| A | RLM | DPO | | 10-4-02 | INITIAL RELEASE |

UNLESS OTHERWISE SPECIFIED

| TOLERANCES | | |
|---|---|---|
| | X.X ± 0.1 | FRAC. ± 1/64 |
| | X.XX ± 0.03 | Angles ± 1.00° |
| | X.XXX ± 0.010 | FINISH 125 √(μin) |

DO NOT SCALE PRINT

THREADS ARE CLASS 2
CHAMFER ENDS OF ALL SCREW TREADS 30°
CUT ROUND, 1.5 THREAD RELIEF ON MACHINED THREADS
BREAK EDGES .016 MAX. ON MACHINED WORK
REMOVE BURRS, WELD SPLATTER & LOOSE SCALE
IN ACCORDANCE WITH ASME Y14.5M & B46.1

**SHOP ORDERS**

| | | | |
|---|---|---|---|
| SER NO. | - | | |
| ACCT NO. | | NO. REQD | DATE ISSD - |
| DEL TO | | | DATE REQD - |
| SURFACE TREATMT | - | | |
| IDENT METHOD | TAG | | |
| PROJECT NUMBER | N/A | | N/A (logo) |
| PROJECT NAME | N/A | | |
| DWG BY | A. HARRIS | | DATE 29-Aug-02 |
| CHK BY | D. OSHATZ | | DATE 17-Sep-02 |
| APR BY | D. OSHATZ | | DATE 17-Sep-02 |

**ERNEST ORLANDO LAWRENCE BERKELEY NATIONAL LABORATORY**
UNIVERSITY OF CALIFORNIA - BERKELEY

LHC IR FEEDBOX
CRYOGENICS
WELD BRACKET

| MICROFILMED: | DWG. TYPE | SHOWN ON | SCALE: 1/2 | DO NOT SCALE PRINTS |
|---|---|---|---|---|
| | PART | - | SHEET 1 OF 1 | |
| PATENT CLEAR: | DESIGN ACCT. NO. | CATEGORY CODE | DWG. NO. | SIZE / REV. |
| | Z5LCE2 | LH2003 | 25M8622 | B |

Dwg. File: 25M862 Model File: 25M862

Rev. 1/29/2000 J. R. Osborn

Officially Released to the LBNL Document Control Center
Released: March 5th, 2003 DCC Auth Key: GB619GXGT

Downloaded by: Daniel Pulsifer at April 09, 2007 10:57:46