| DWG. NO. | SIZE | REV. | SH. |
|---|---|---|---|
| 25M8552 | A | 1 | |

| DESCRIPTION | MATERIAL | MAT. LOCATION |
|---|---|---|
| ROUND | 304L SS | - |

NOTES: (UNLESS OTHERWISE SPECIFIED)

1. THIS IS A CRYOGENIC VACUUM COMPONENT.
2. CLEANING PROCEDURE : PER VENDOR SPECIFICATION WITH LBNL APPROVAL.
3. PACKAGING AND STORAGE PROCEDURE OF THE COMPONENTS: PER VENDOR SPECIFICATION WITH LBNL APPROVAL.
4. DIMENSIONS AND TOLERANCING PER ANSI Y14.5M-1982. UNITS ARE IN INCHES UNLESS OTHERWISE SPECIFIED.
5. USE OF SULFUR OR SILICONE BEARING OILS, LUBRICANTS, OR COOLANTS ARE STRICTLY PROHIBITED.
6. USE OF RESIN OR RUBBER BONDED ABRASIVES UNDER POWER IS STRICTLY PROHIBITED. USE VITREOUS BONDED ABRASIVES ONLY.

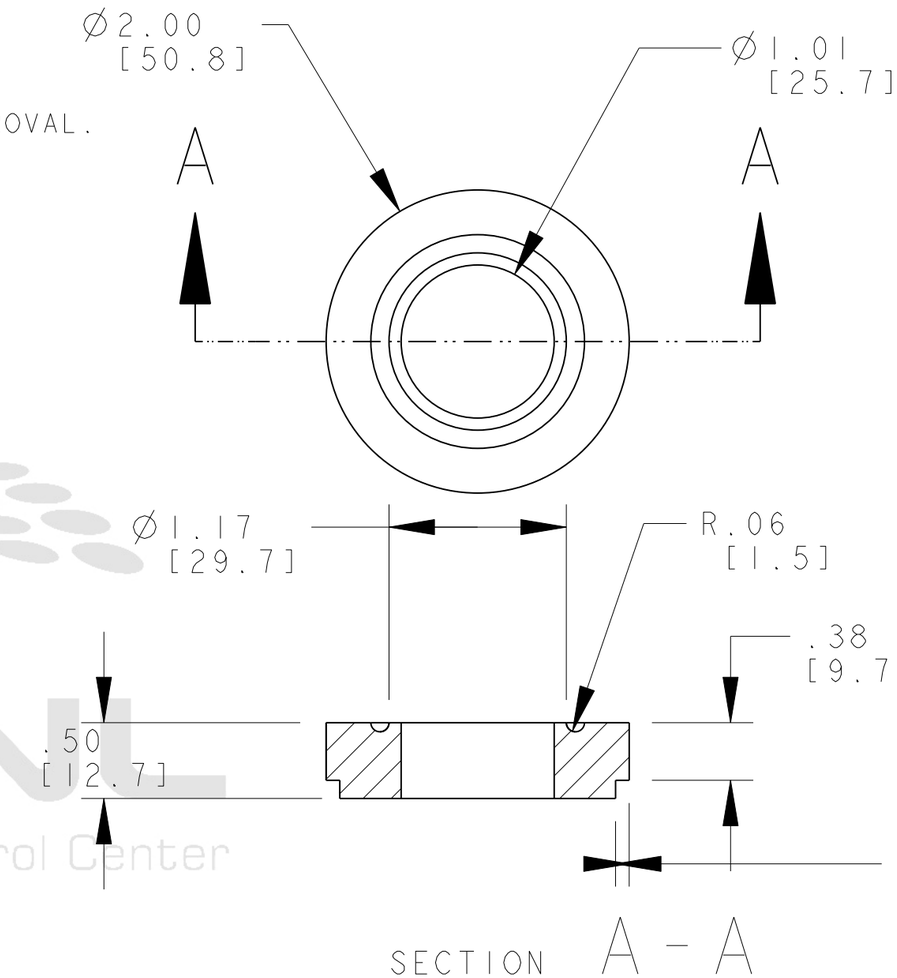


LBNL
Document Control Center

| REV | DWG | CHK | ZONE | DATE | CHANGES |
|---|---|---|---|---|---|
| A | MJK | DPO | | 9/19/02 | INITIAL RELEASE |

UNLESS OTHERWISE SPECIFIED

| TOLERANCES | | |
|---|---|---|
| | X.X ± 0.1 | FRAC. ± 1/64 |
| | X.XX ± 0.03 | Angles ± 1.00° |
| | X.XXX ± 0.010 | FINISH 125 √(µin) |

DO NOT SCALE PRINT

THREADS ARE CLASS 2
CHAMFER ENDS OF ALL SCREW TREADS 30°
CUT ROUND, 1.5 THREAD RELIEF ON MACHINED THREADS
BREAK EDGES .016 MAX. ON MACHINED WORK
REMOVE BURRS, WELD SPLATTER & LOOSE SCALE
IN ACCORDANCE WITH ASME Y14.5M & B46.1

**SHOP ORDERS**

| | | | |
|---|---|---|---|
| ACCT NO. | | NO. REQD | |
| DEL TO | | | |
| SURFACE TREATMT | - | | |
| IDENT METHOD | TAG | | |
| PROJECT NUMBER | N/A | | |
| PROJECT NAME | N/A | | |
| DWG BY | REVEL | DATE | 31-Jul-02 |
| CHK BY | OSHATZ | DATE | 9/19/02 |
| APR BY | OSHATZ | DATE | 9/19/02 |

SER NO. -
DATE ISSD -
DATE REQD -
N/A (logo)

**ERNEST ORLANDO LAWRENCE BERKELEY NATIONAL LABORATORY**
UNIVERSITY OF CALIFORNIA - BERKELEY

LHC IR FEEDBOX
CRYOGENICS
DH SLEEVE CAP

| MICROFILMED: | DWG. TYPE | SHOWN ON | SCALE: 1/1 | DO NOT SCALE PRINTS |
|---|---|---|---|---|
| | PART | 251137 | SHEET 1 OF 1 | |
| PATENT CLEAR: | DESIGN ACCT. NO. | CATEGORY CODE | DWG. NO. | SIZE / REV. |
| | Z5LCE2 | LH2003 | 25M8552 | A |

Dwg. File: 25M855 Model File: 25M855

Rev. 1/29/2000 J. R. Osborn

Officially Released to the LBNL Document Control Center
Released: October 1st, 2002 DCC Auth Key: 24GOKPHCXM
Downloaded by: Daniel Pulsifer at April 09, 2007 10:57:46