DESCRIPTION	MATERIAL	MAT. LOCATION
3/4" INVAR ROD, SHORT	INVAR 36	-

NOTES: (UNLESS OTHERWISE SPECIFIED)

1. THIS IS A CRYOGENIC VACUUM COMPONENT.
2. CLEANING PROCEDURE : PER VENDOR SPECIFICATION WITH LBNL APPROVAL.
3. DIMENSIONS AND TOLERANCING PER ANSI Y14.5M-1982.
   UNITS ARE IN INCHES [mm] UNLESS OTHERWISE SPECIFIED.

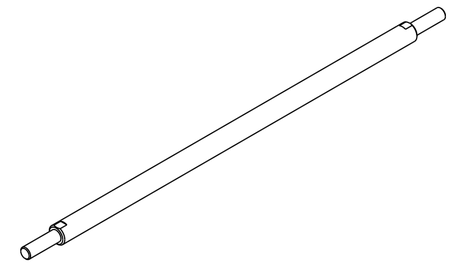

SCALE 1/4

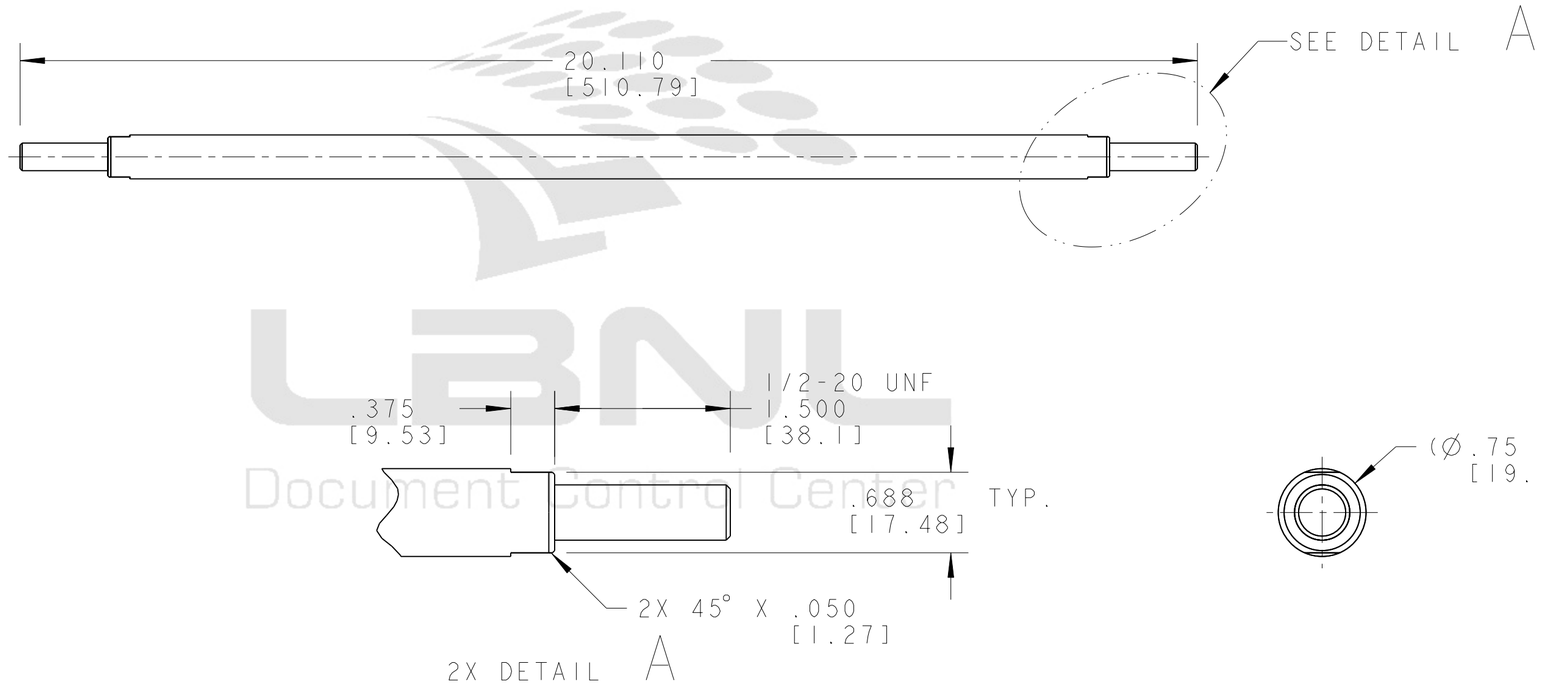

REV	DWG	CHK	ZONE	DATE	CHANGES
B	RLM	JPZ		6/23/03	REMOVED NOTE 4
A	AH	DPO		9/13/02	INITIAL RELEASE

UNLESS OTHERWISE SPECIFIED

TOLERANCES		
	X.X ± 0.1	FRAC. ± 1/64
	X.XX ± 0.03	Angles ± 1.00°
	X.XXX ± 0.010	FINISH 125 √(µin)

DO NOT SCALE PRINT

THREADS ARE CLASS 2
CHAMFER ENDS OF ALL SCREW TREADS 30°
CUT ROUND, 1.5 THREAD RELIEF ON MACHINED THREADS
BREAK EDGES .016 MAX. ON MACHINED WORK
REMOVE BURRS, WELD SPLATTER & LOOSE SCALE
IN ACCORDANCE WITH ASME Y14.5M & B46.1

SHOP ORDERS

SER NO.	-		
ACCT NO.		NO. REQD	DATE ISSD -
DEL TO			DATE REQD -
SURFACE TREATMT	-		
IDENT METHOD	TAG		
PROJECT NUMBER	N/A		
PROJECT NAME	N/A		
DWG BY	S.Bartlett		DATE 01-Aug-02
CHK BY	S.VIROSTEK		DATE 03-SEP-02
APR BY	D.OSHATZ		DATE 03-SEP-02

ERNEST ORLANDO LAWRENCE
BERKELEY NATIONAL LABORATORY
UNIVERSITY OF CALIFORNIA - BERKELEY

LHC IR FEEDBOX
CRYOGENICS
INVAR ROD, SHORT

MICROFILMED:	DWG. TYPE	SHOWN ON	SCALE: 3/16	DO NOT SCALE PRINTS
	PART	-	SHEET 1 OF 1	
PATENT CLEAR:	DESIGN ACCT. NO.	CATEGORY CODE	DWG. NO.	SIZE / REV.
	Z5LCC2	LH2003	25M8533	B

DWG. NO. 25M8533 SIZE B REV. SH. 1

Dwg. File: 25M853 Model File: 25M853

Officially Released to the LBNL Document Control Center
Released: July 25th, 2003 DCC Auth Key: 681TODRDUK

Downloaded by: Daniel Pulsifer at April 09, 2007 10:57:46