DWG. NO.	SIZE	REV.	SH.
25M8192	A	1	

DESCRIPTION	MATERIAL	MAT. LOCATION
-	304L SS	-

NOTES: (UNLESS OTHERWISE SPECIFIED)

1. ALL DIMENSIONS ARE IN INCHES [MILLIMETERS].
3. THIS IS A CRYOGENIC VACUUM PART.
4. CLEANING PROCEDURE: PER VENDOR SPECIFICATION WITH LBNL APPROVAL.
5. PACKING AND STORAGE PROCEDURE OF THE COMPONENTS: PER VENDOR SPECIFICATION WITH LBNL APPROVAL.
6. DIMENSIONS AND TOLERANCING PER ANSI Y14.5M-1982 UNITS ARE IN INCHES UNLESS OTHERWISE SPECIFIED.
7. USE OF SULFUR OR SILICONE BEARING OILS, LUBRICANTS, OR COOLANTS ARE STRICTLY PROHIBITED
8. USE OF RESIN OR RUBBER BONDED ABRASIVES UNDER POWER IS STRICTLY PROHIBITED. USE VITREOUS BONDED ABRASIVES ONLY.
10. VENDOR SUGGESTED CHANGES TO TOLERANCES TO FACILITATE FABRICATION OR ASSEMBLY; SUBJECT TO LBNL APPROVAL.

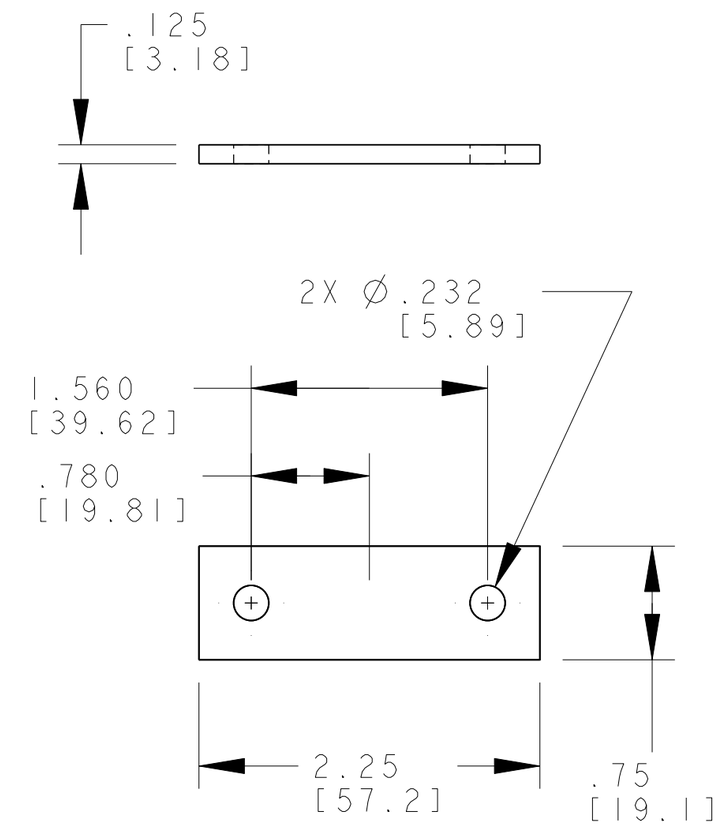

LBNL
Document Control Center

REV	DWG	CHK	ZONE	DATE	CHANGES
A	JDR	DPO		10/01/02	INITIAL RELEASE

UNLESS OTHERWISE SPECIFIED

TOLERANCES		
	X.X ± 0.1	FRAC. ± 1/64
	X.XX ± 0.03	Angles ± 1.00°
	X.XXX ± 0.010	FINISH 125 √(µin)

DO NOT SCALE PRINT

THREADS ARE CLASS 2
CHAMFER ENDS OF ALL SCREW TREADS 30°
CUT ROUND, 1.5 THREAD RELIEF ON MACHINED THREADS
BREAK EDGES .016 MAX. ON MACHINED WORK
REMOVE BURRS, WELD SPLATTER & LOOSE SCALE
IN ACCORDANCE WITH ASME Y14.5M & B46.1

SHOP ORDERS

ACCT NO.	NO. REQD	SER NO.	-
DEL TO		DATE ISSD	-
SURFACE TREATMT	-	DATE REQD	-
IDENT METHOD	TAG		
PROJECT NUMBER	N/A	N/A (logo)	
PROJECT NAME	N/A		
DWG BY	D.REAVILL	DATE	01-Oct-02
CHK BY	OSHATZ	DATE	01-OCT-02
APR BY	OSHATZ	DATE	01-OCT-02

ERNEST ORLANDO LAWRENCE BERKELEY NATIONAL LABORATORY
UNIVERSITY OF CALIFORNIA - BERKELEY

LHC IR FEEDBOX
CRYOGENICS
PLATE, 2 HOLE

MICROFILMED:	DWG. TYPE	SHOWN ON	SCALE: 1/1	DO NOT SCALE PRINTS
	PART	-	SHEET 1 OF 1	
PATENT CLEAR:	DESIGN ACCT. NO.	CATEGORY CODE	DWG. NO.	SIZE / REV.
	Z5LCE3	LH2003	25M8192	A

Dwg. File: 25M819 Model File: 25M819

Rev. 1/29/2000 J. R. Osborn

Officially Released to the LBNL Document Control Center
Released: October 4th, 2002 DCC Auth Key: CFOHJRWL5Z

Downloaded by: Daniel Pulsifer at April 09, 2007 10:57:45