ITEM	PART NO	REQD	DESCRIPTION	MATERIAL
4	-		NUT, M10X1.5	SS 18-8
3	-		LOCK WASHER, M10	SS
2	-		SCH, M10X1.5, 70LG, SILVER PLATED	SS 18-8
1	-		SHEET, 20GA	SS 304

NOTES: (UNLESS OTHERWISE SPECIFIED)

1. THIS IS A CRYOGENIC VACUUM COMPONENT.
2. CLEANING PROCEDURE : PER VENDOR SPECIFICATION WITH LBNL APPROVAL.
3. PACKAGING AND STORAGE PROCEDURE OF THE COMPONENTS: PER VENDOR SPCIFICATION WITH LBNL APPROVAL.
4. DIMENSIONS AND TOLERANCING PER ANSI Y14.5M-1982. UNITS ARE IN INCHES UNLESS OTHERWISE SPECIFIED.
5. USE OF SULFUR OR SILICONE BEARING OILS, LUBRICANTS, OR COOLANTS ARE STRICTLY PROHIBITED.
6. USE OF RESIN OR RUBBER BONDED ABRASIVES UNDER POWER IS STRICTLY PROHIBITED. USE VITREOUS BONDED ABRASIVES ONLY.

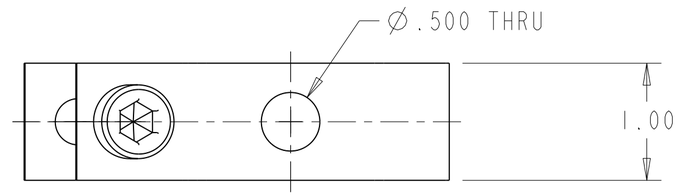

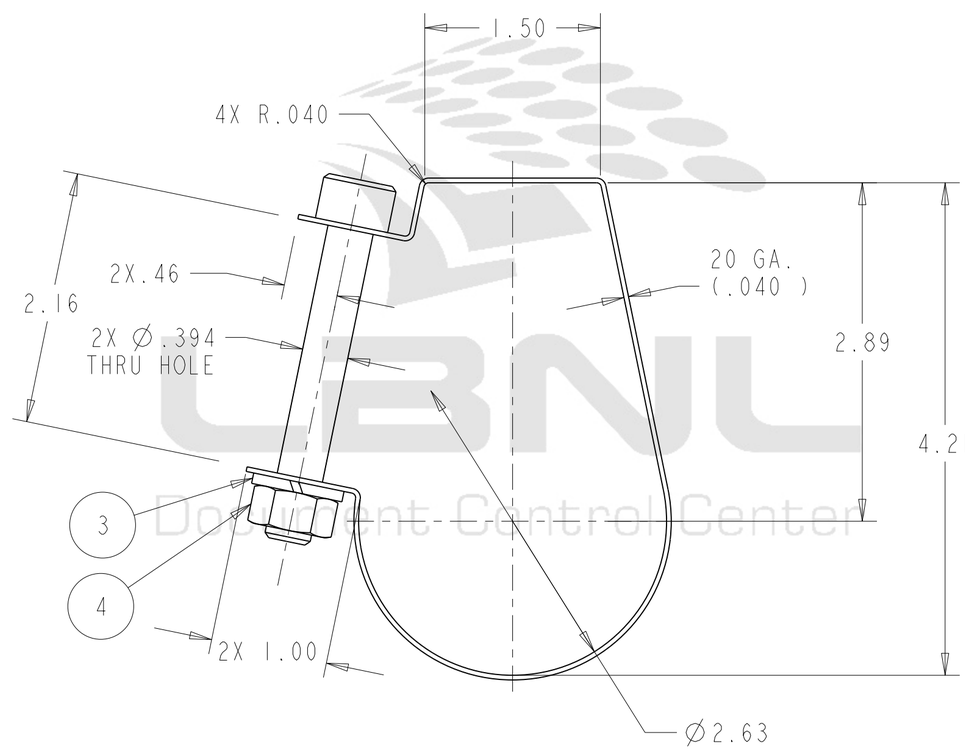

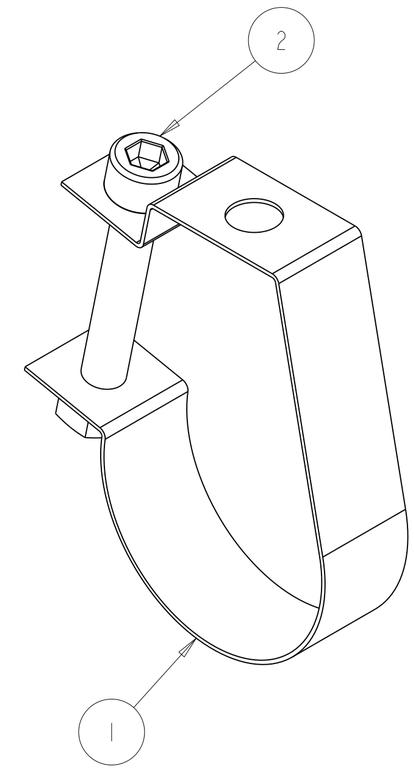

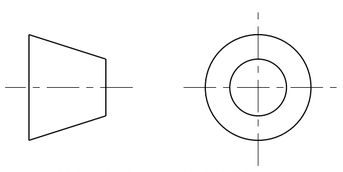

THIRD ANGLE PROJECTION

REV	DWG	CHK	ZONE	DATE	CHANGES
A	ARH	DPO		9/19/02	INITIAL RELEASE

UNLESS OTHERWISE SPECIFIED

TOLERANCES		
	X.X ± 0.1	FRAC. ± 1/64
	X.XX ± 0.02	Angles ± 1.00°
	X.XXX ± 0.005	FINISH 125 √(µin)

DO NOT SCALE PRINT

THREADS ARE CLASS 2
CHAMFER ENDS OF ALL SCREW TREADS 30°
CUT ROUND, 1.5 THREAD RELIEF ON MACHINED THREADS
BREAK EDGES .016 MAX. ON MACHINED WORK
REMOVE BURRS, WELD SPLATTER & LOOSE SCALE
IN ACCORDANCE WITH ASME Y14.5M & B46.1

SHOP ORDERS

ACCT NO.	NO. REQD	SER NO.	-
DEL TO		DATE ISSD	-
SURFACE TREATMT	-	DATE REQD	-
IDENT METHOD	TAG		
PROJECT NUMBER	N/A		N/A (logo)
PROJECT NAME	N/A		
DWG BY	R LA MANTIA	DATE	21-Aug-02
CHK BY	M HOFF	DATE	19-Sep-02
APR BY	D OSHATZ	DATE	19-Sep-02

ERNEST ORLANDO LAWRENCE BERKELEY NATIONAL LABORATORY
UNIVERSITY OF CALIFORNIA - BERKELEY

LHC IR FEEDBOX
CRYOGENICS
PIPE HANGER, SURGE TANK

MICROFILMED:	DWG. TYPE	SHOWN ON	SCALE: 1.000	DO NOT SCALE PRINTS
	ASSEM	-	SHEET 1 OF 1	
PATENT CLEAR:	DESIGN ACCT. NO.	CATEGORY CODE	DWG. NO.	SIZE / REV.
	Z5LCE3	LH2003	25M8113	A

Dwg. File: 25M811 Model File: 25M811

Rev. 1/28/2000 J. E. Odarenko

DWG. NO. 25M8113 SIZE A REV. SH. 1

Officially Released to the LBNL Document Control Center
Released: October 1st, 2002 DCC Auth Key: U6PQI30GQG
Downloaded by: Daniel Pulsifer at April 09, 2007 10:57:45