NOTES: (UNLESS OTHERWISE SPECIFIED)

1. THIS IS A CRYOGENIC VACUUM COMPONENT.
2. CLEANING PROCEDURE : PER VENDOR SPECIFICATION WITH LBNL APPROVAL.
3. PACKAGING AND STORAGE PROCEDURE OF THE COMPONENTS: PER VENDOR SPCIFICATION WITH LBNL APPROVAL.
4. DIMENSIONS AND TOLERANCING PER ANSI Y14.5M-1982. UNITS ARE IN INCHES UNLESS OTHERWISE SPECIFIED.
5. MOLYBDENUM DISULFIDE OR EQUIVALENT ANTI-SEIZE AGENT ON THREADS. (C)
6. RING TERMINALS USED FOR THERMAL INTERCEPT AT HIGHER ASSEMBLY. (C)

ITEM	PART NO	REQD	DESCRIPTION	MATERIAL
7	-	4	RING TERMINAL, AWG #4, MCMASTER 7113K252 OR EQUIVALENT	CU, TIN PLATED
6	-	1	THREADED ROD, 3/8"-16 UNC	B8M STRN.HRD.316 SS
5	-	1	THREADED ROD, 3/8"-24 UNF	B8M STRN.HRD.316 SS
4	-	1	TUBE, Ø5/8"OD, .188 WALL OR 5/8" ROD	304 SS
3	-	2	LOCK WASHER, 3/8	SS
2	-	2	JAM NUT, 3/8-16 UNC	ST 18-8
1	-	1	JAM NUT, 3/8-24 UNF	ST 18-8

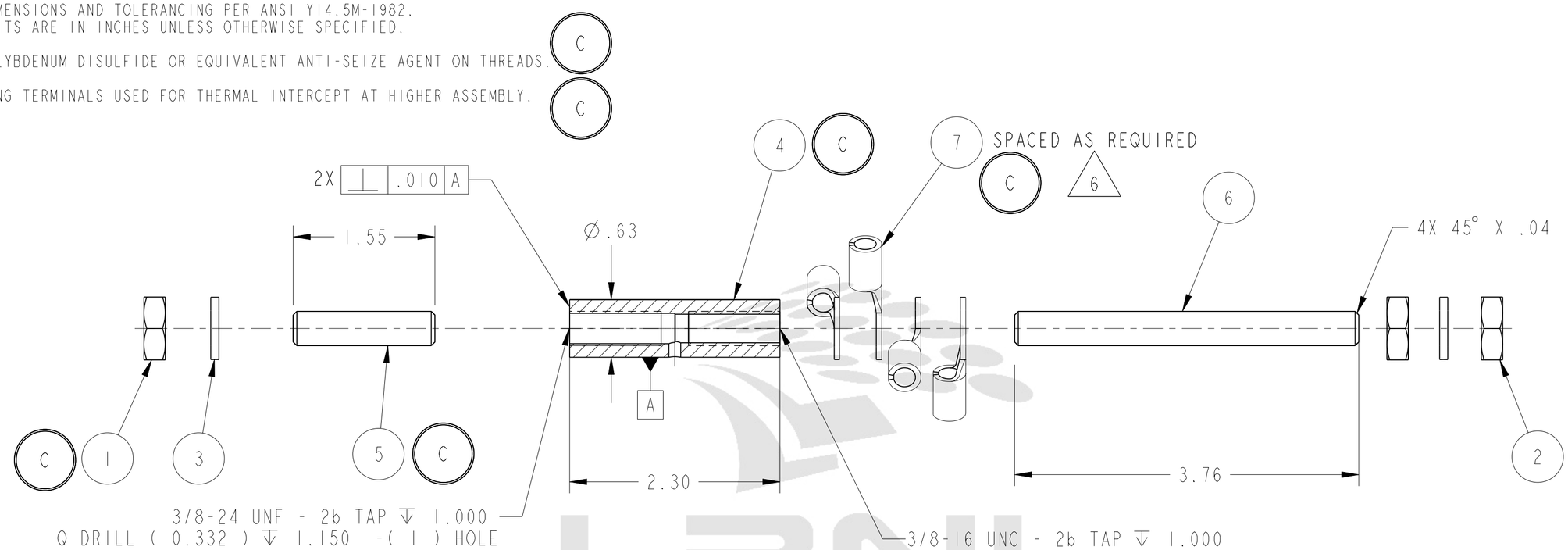

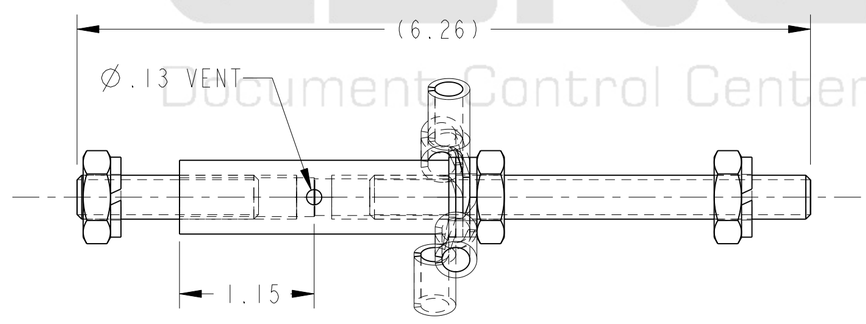

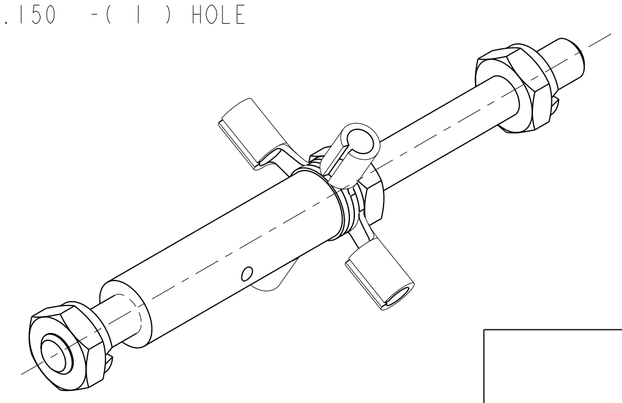

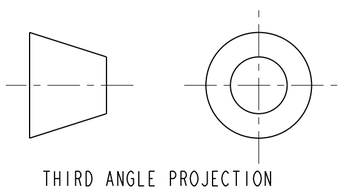

THIRD ANGLE PROJECTION

REV	DWG	CHK	ZONE	DATE	CHANGES
C	RLM	JPZ		2/11/04	TITLE: ADJUSTABLE WAS THERMAL BREAK REMOVE DOWEL PINS AND HOLES. ITEM 4 WAS NEMA G-10, ADD THREADS. THREADED RODS 3/8-16-UNC AND 3/8-24-UNF. JAM NUTS 3/8-16-UNC AND 3/8-24-UNF. REMOVE NOTE 7, ADD RING TERMINALS, NEW NOTES 5 AND 6.
B	MJK	DPO	B2	11/6/02	CHANGED DIMENSION FROM 2.42 TO 3.76
A	ARH	DPO		9/16/02	INITIAL RELEASE

UNLESS OTHERWISE SPECIFIED

TOLERANCES: X.X ± 0.1 | FRAC. ± 1/64 | X.XX ± 0.02 | Angles ± 1.00° | X.XXX ± 0.005 | FINISH 125 √(μin)

DO NOT SCALE PRINT

THREADS ARE CLASS 2
CHAMFER ENDS OF ALL SCREW TREADS 30°
CUT ROUND, 1.5 THREAD RELIEF ON MACHINED THREADS
BREAK EDGES .016 MAX. ON MACHINED WORK
REMOVE BURRS, WELD SPLATTER & LOOSE SCALE
IN ACCORDANCE WITH ASME Y14.5M & B46.1

SHOP ORDERS

ACCT NO.	NO. REQD	SER NO.	-
DEL TO		DATE ISSD	-
SURFACE TREATMT	-	DATE REQD	-
IDENT METHOD	TAG		
PROJECT NUMBER	N/A		N/A (logo)
PROJECT NAME	N/A		
DWG BY	R LA MANTIA	DATE	20-Aug-02
CHK BY	M HOFF	DATE	23-Aug-02
APR BY	D OSHATZ	DATE	23-Aug-02

ERNEST ORLANDO LAWRENCE BERKELEY NATIONAL LABORATORY
UNIVERSITY OF CALIFORNIA - BERKELEY

LHC IR FEEDBOX
CRYOGENICS
THRUST SUPPORT, ADJUSTABLE

MICROFILMED:	DWG. TYPE	SHOWN ON	SCALE: 1.000	DO NOT SCALE PRINTS
	ASSEM	-	SHEET 1 OF 1	
PATENT CLEAR:	DESIGN ACCT. NO.	CATEGORY CODE	DWG. NO.	SIZE / REV.
	Z5LCE3	LH2003	25M8103	C

Dwg. File: 25M810 Model File: 25M810

DWG. NO. 25M8103 SIZE C REV. SH. 1

LBNL Document Control Center

Officially Released to the LBNL Document Control Center
Released: March 31st, 2004 DCC Auth Key: 345QGMGME

Downloaded by: Daniel Pulsifer at April 09, 2007 10:57:45