DWG. NO.	SIZE	REV.	SH.
2518954	A	1	

ITEM	PART NO	REQD	DESCRIPTION	MATERIAL
4	251896	3	BUS DUCT SPACER, MULTI-CONDUIT	SS 304L
3	-	1	TUBE	SS 304L
2	-	1	PLATE	SS 304L
1	-	1	FLANGE	SS 304L

NOTES: (UNLESS OTHERWISE SPECIFIED)

1. THIS IS A CRYOGENIC VACUUM COMPONENT.
2. WELDING PROCEDURE: PER VENDOR SPECIFICATION WITH LBNL APPROVAL.
3. CLEANING PROCEDURE : PER VENDOR SPECIFICATION WITH LBNL APPROVAL.
4. PACKAGING AND STORAGE PROCEDURE OF THE COMPONENTS: PER VENDOR SPCIFICATION WITH LBNL APPROVAL.
5. DIMENSIONS AND TOLERANCING PER ANSI Y14.5M-1982. UNITS ARE IN INCHES [mm] UNLESS OTHERWISE SPECIFIED.
6. USE OF SULFUR OR SILICONE BEARING OILS, LUBRICANTS, OR COOLANTS ARE STRICTLY PROHIBITED.
7. USE OF RESIN OR RUBBER BONDED ABRASIVES UNDER POWER IS STRICTLY PROHIBITED. USE VITREOUS BONDED ABRASIVES ONLY.
8. VENDOR SUGGESTED CHANGES TO WELD PREPS; SUBECT TO LBNL APPROVAL.
9. ELBOWS MAY BE USED ON THE TUBE BENDS AS NEEDED.
10. VENDOR SUGGESTED CHANGES TO TOLERANCES TO FACILITATE FABRICATION OR ASSEMBLY; SUBECT TO LBNL APPROVAL.
11. REMOVE ALL THE BURRS AND REAM THE ENDS FOR CIRCULARITY AND CLEAN ENDS.
12. TUBE END SURFACE MUST BE PERPENDICULAR TO THE TUBE AXIS WITHIN +/-.010.
13. PERFORM ACCEPTANCE TESTS PER SECTION 3.2 OF LBNL SPECIFICATION M856.

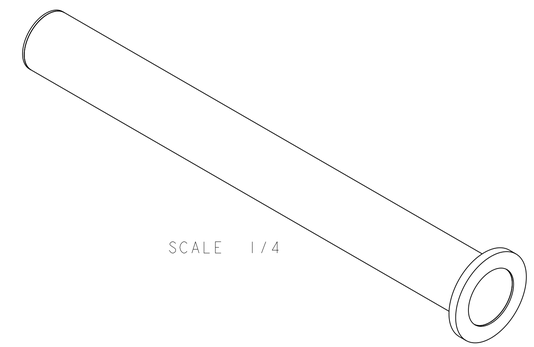

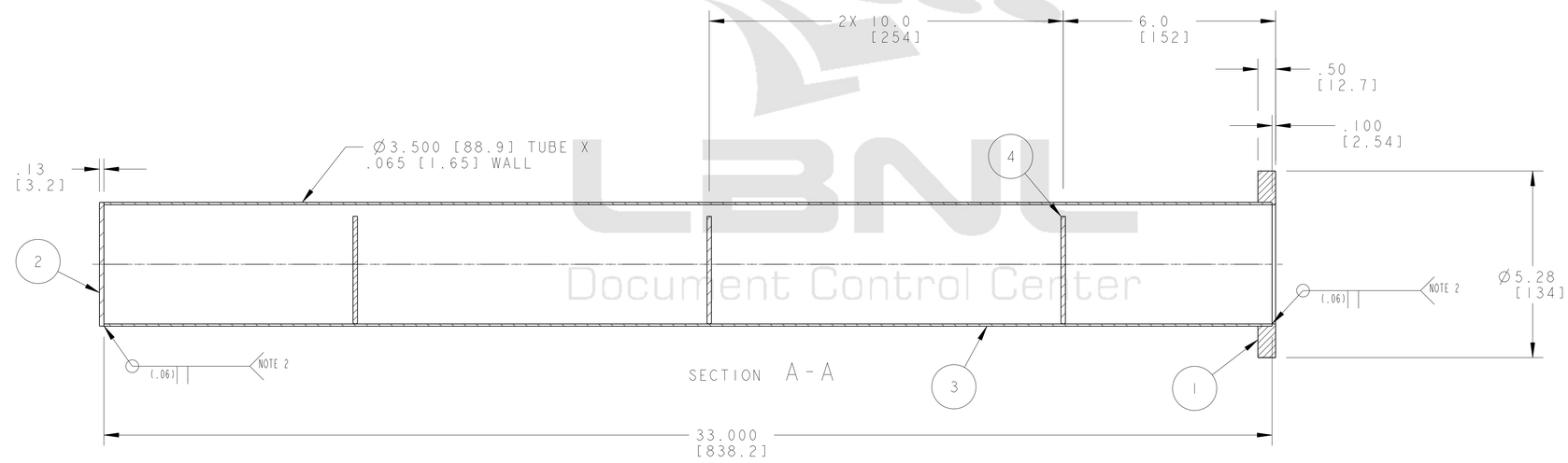

Document Control Center

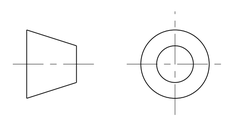

REV	DWG	CHK	ZONE	DATE	CHANGES
A	ARH	DPO		9/19/02	INITIAL RELEASE

UNLESS OTHERWISE SPECIFIED
TOLERANCES: X.X ± 0.1 FRAC. ± 1/64; X.XX ± 0.03 Angles ± 1.00°; X.XXX ± 0.010 FINISH 125 √(μin)
DO NOT SCALE PRINT
THREADS ARE CLASS 2
CHAMFER ENDS OF ALL SCREW TREADS 30°
CUT ROUND, 1.5 THREAD RELIEF ON MACHINED THREADS
BREAK EDGES .016 MAX. ON MACHINED WORK
REMOVE BURRS, WELD SPLATTER & LOOSE SCALE
IN ACCORDANCE WITH ASME Y14.5M & B46.1

SHOP ORDERS
ACCT NO. / NO. REQD / DEL TO / SURFACE TREATMT - / IDENT METHOD TAG / PROJECT NUMBER N/A / PROJECT NAME N/A
DWG BY R LA MANTIA DATE 18-Jan-02
CHK BY Jon Zbasnik DATE 31-JUL-02
APR BY Jon Zbasnik DATE 31-JUL-02
SER NO. - / DATE ISSD - / DATE REQD -

ERNEST ORLANDO LAWRENCE BERKELEY NATIONAL LABORATORY
UNIVERSITY OF CALIFORNIA - BERKELEY

LHC IR FEEDBOX
CRYOGENICS
Q3 BUS DUCT EXTENSION

MICROFILMED: / PATENT CLEAR: / DWG. TYPE ASSEM / DESIGN ACCT. NO. Z5LCE2 / SHOWN ON - / CATEGORY CODE LH2003 / SCALE: 1/2 / DO NOT SCALE PRINTS / SHEET 1 OF 1 / DWG. NO. 2518954 / SIZE / REV. A

Officially Released to the LBNL Document Control Center
Released: October 1st, 2002 DCC Auth Key: HI7FO9JDUE
Downloaded by: Daniel Pulsifer at April 09, 2007 10:57:44